School Safety/Emergency Operations Plan
Ohio Attorney General School Safety Task Force
June 2013

How To Use This Plan

Ohio schools must have a comprehensive school safety plan that addresses their response not only to severe weather and natural disasters, chemical accidents and medical emergencies, but also to school violence and various types of terrorist threats.

This recommended School Safety/Emergency Operations Plan includes comprehensive information and descriptions of the overall concept of operations, organization, roles and responsibilities, along with checklists, to guide schools and school personnel in addressing various emergency hazards that may affect the safety of our children and school community.

The checklists and national best practices, outlined in the annexes of this plan with details of what to do in the event of various emergencies, are suggestions meant to assist schools in the development of their own customized School Safety Emergency Operations Plan (School EOP).

Policies and procedures related to or contained in the plan should be modified based on a school's unique circumstances and resources. In order to be an effective tool to manage an emergency event, a School EOP must include response procedures that are developed through threat assessments, safety audits, and planning and training before an incident occurs.

Planning, conducting live drills, and participating in table-top exercises with law enforcement, fire, emergency officials, and other members of the school community will ensure the sustainability of the School EOP. Building these relationships and community engagement are vital to a safer school community.

The content, organization, and terminology provided in this School EOP align with the Federal Emergency Management Agency's Sample School Operations Plan (2011). In addition, it closely mirrors format and organization of the State of Ohio, county, and municipal EOPs. The Ohio EMA and FEMA also train on this planning format in their emergency operations planning courses. Using this planning format will help the school plan comport with local emergency management and response plans.

The concepts and information contained in this plan is consistent with the National Incident Management System (NIMS), a set of principles that provides a systematic, proactive approach for planning, prevention, response, and recovery in managing emergency incidents. Consistent planning principles and processes across all levels of government, from the federal all the way to the individual school level will help ensure more efficient and coordinated plans, preparedness and emergency response.

While being NIMS compliant is no guarantee of federal grant funding, current federal grant opportunities require that recipients be in compliance with NIMS principles. It is expected that additional regulations will be instituted by the Department of Homeland Security and the U.S. Department of Educations in the area of school safety and emergency planning. It is the intent that this recommended School EOP will put Ohio school districts and their schools in a good place to incorporate any additional requirements related to school safety initiatives.

With regard to specific information to be included in the School EOP, it is important to create and insert appropriate floor plans for each building and provide critical emergency information. These must be kept current. It is also important to identify appropriate staff to fill specific roles related to command operations and keep this information in a secure and safe location. Remember that key staff assignments and contact information must be regularly updated to ensure efficient operations in the event of an emergency. Finally, once you have developed your School EOP, appropriate workshops and/or seminars should be conducted to ensure that all district and school personnel understand the plan and their roles and responsibilities.

School safety is the job of the entire school community. This effort requires leadership and coordination by school administration, and involvement and participation from all sectors of the school community.

* A Quick Reference “School EOP Checklist” is located at Attachment B.

[School Name]
Emergency Operations Plan
[Date Adopted]

EMERGENCY FIRST RESPONDERS

Ohio Revised Code § 3313.536 requires the board of education of each city, exempted village, and local school district and the governing authority of each chartered nonpublic school to file a comprehensive school safety plan and floor plan for each school building under the board's or governing authority's control. This information, once filed with the Ohio Attorney General's Office, will be made electronically available to law enforcement personnel in the event of an emergency.

In order to remain in compliance with R.C. 3313.536(B), the board or governing authority shall update the comprehensive safety plan at least once every three years and the floor plans whenever a major modification to the building requires changes in the procedures outlined in the plan.

To provide the best information to first responders coming to the aid of a school during an emergency or critical incident, schools should develop their school safety plans into three sections, as follows:

- Incident Response Plan – The Incident Response Plan template was developed by the Ohio Attorney General's School Safety Taskforce to provide critical information to first responders during their immediate response to an incident. This template should be provided as the first few pages of the school's safety plan, so that it may be prominently displayed to responders when retrieving the information from the Ohio Law Enforcement Gateway (OHLEG). Schools are advised to update the Incident Response Plan whenever information on the plan changes and resubmit the update to the Attorney General's Office.

- Floor Plans - School floor plans (not a building blueprint) shall be submitted to the Attorney General's Office. The Ohio Attorney General's School Safety Taskforce has provided suggested guidelines for the development of standardized floor plans to ensure the information presented is clear and provides the most critical information in responding to an emergency in a school facility.

- School Safety Plan Protocols - The larger school safety plan should provide the more comprehensive information necessary for both school and public safety officials in developing an all hazards approach to school safety planning. This plan should be customized to meet your school's specific needs and circumstances. Meeting with emergency first responders and other community stakeholders is recommended as you develop and customize your plan.

INCIDENT RESPONSE PLAN

School Name: _____ School IRN:_____

School Building Street Address: _____

City:_____ County:_____

School Type:_____

School District:_____ District IRN:_____

Submitting Official's Name:_____ Position:_____

Date of Submission:_____

Key Contact Information

School Decision-Maker's Name: Cellular Telephone:

Secondary School Decision-Maker's Name: Cellular Telephone:

Maintenance Staff Name: Cellular Telephone:

Custodial Staff Name: Cellular Telephone:

Keyholder's Name: Cellular Telephone:

Key Knox Box Location (where applicable):

Primary Jurisdiction of Responding Agencies

Police Department: Contact Number:

Fire Department: Contact Number:

EMS/Ambulance Service: Contact Number:

Emergency Management Agency Director: Contact Number:

Communications

Name of MARCS Radio Talk Group:

Description of Communication Platform/Capabilities:

Location of School Safety Plan Documents

Location of Full-Size Floor Plans (hard copy)

On-Scene:

Off-Site:

Location of Full School Safety Plan Documents (hard-copy)

On-Scene:

Off-Site:

Details on how to access listed locations:

FLOOR PLAN CHECKLIST

The following checklist was developed by the Attorney General's School Safety Taskforce to aid your school in preparing floor plans. In order to remain in compliance with R.C. 3313.536(B), the board or governing authority shall update the floor plans whenever a major modification to the building requires a change in the plan. You are encouraged to use this checklist in reviewing and updating your floor plans. This checklist should be submitted to the Attorney General's Office along with the floor plans.

School Name: _____ School IRN:_____
School Building Street Address: _____
City:_____ County:_____
School Type:_____
School District:_____ District IRN:_____
Submitting Official's Name:_____ Position:_____
Date of Submission:_____

FLOOR PLANS:

School Review	AGO Review	
		School name, IRN number, address, and phone numbers for both the school office and for emergency maintenance included on each page of the floor plans
		Submitted electronically (this is preferable) or on white letter, legal, or 11" x 17" paper only (no blueprints)
		Typed; no shading; minimal or no handwriting
		Include a key to define any symbols used
		Compass directions (at a minimum North) clearly noted
		Each floor should be on a separate page
		Street names that surround the facility clearly identified
		Building entrances/exits marked and numbered, with service entrances clearly identified
		Windows shall be graphically shown on the floor plans
		All rooms labeled by room number, with common areas and administrative offices labeled by use
		Location of water, gas and electrical shutoffs clearly noted
		Location of existing AED, areas of refuge/assistance, fire extinguishers, alarm panel, knox box, and camera locations clearly noted
		The area where floor plans and/or building blueprints are stored are clearly identified
		Exterior alpha phonetic identification of building sides (Alpha, Bravo, Charlie, Delta) *Note: The local fire department can inform school officials on how to label the buildings on the school floor plans as they are developed.*

BUILDING FLOOR PLANS

MUST BE PROVIDED FOR EACH BUILDING

INSERT SCHOOL FLOOR PLANS HERE
(Example Model Floor Plans Provided as Attachment A)

SIGNATORY PAGE

In developing the safety plan for each building, the board or governing authority must involve community law enforcement, fire, and safety officials, parents of students who are assigned to the building and teachers and nonteaching employees who are assigned to the building as described in R.C. 3313.536(A). The school safety plan should be consistent with the local incident command structure, as established by local law enforcement and other public safety agencies. The safety plan should clearly identify the latest revision date and the community members involved in its creation.

Authorized School Authority:

Signature	Title

Primary Community Law Enforcement:

Signature	Title	Agency

Safety (Fire/EMS/EMA) Official:

Signature	Title	Agency

Parent Representative:

Signature	Affiliation

Teacher Representative:

Signature	Title	Affiliation

Non-Teaching Employee Representative:

Signature	Title	Affiliation

Others (may include School Board President/Members, Principal, School Nurse):

Signature	Title	Affiliation
Signature	Title	Affiliation

SAFETY PLAN

Basic Plan

I. Introduction 10
II. Concept of Operations 15
III. Organization and Assignment of Responsibilities 17
IV. Direction, Control, and Coordination 20
V. Communications 27
VI. Recovery After An Incident 31
VII. Administration, Finance and Logistics 32
VIII. Plan Development, Maintenance, and Distribution 33
School Safety Planning Glossary 36
School Safety Authorities and References 38

Functional Annexes

Continuity of Operations Plan (COOP) 40
Drop, Cover, and Hold 45
Evacuation Procedure 46
Family Reunification 48
Lockdown Procedure 50
Mental Health and Healing 52
Reverse Evacuation Procedure 54
Shelter-In-Place 55

Hazard- and Threat-Specific Annexes

Active Shooter 58
Bomb Threat 61
Bus Accident 63
Chemical or Hazardous materials Spill 66
Explosion 70
Fire 72
Flood 74
Intruder/Hostage 76
Medical Emergency 79
Severe Weather 81
Terrorism Annex 82

I. INTRODUCTION

A. Purpose of the Plan

The purpose of the [School Name] Emergency Operations Plan (School EOP) is to provide information on how to respond to emergency incidents by outlining the responsibilities and duties of [School Name] and its employees. Customization of this plan to meet [School Name] needs and circumstances is important. Developing, maintaining, and exercising the plan empowers employees to act quickly and knowledgably. The plan educates staff, faculty, students, and other key stakeholders on their roles and responsibilities before, during, and after an incident. This plan provides parents and other members of the community with assurances that [School name] has established guidelines and procedures to respond to incidents/hazards in an effective way.

Developing, maintaining, and exercising the School EOP increases legal protection. Schools without established incident management procedures may be found liable for their absence. While no set of policies rules out the potential for legal problems, establishing procedures and guidelines on the best professional practices provides a margin of protection against liability.

B. Scope of the Plan

The School EOP provides guidelines and procedures for dealing with existing and potential school incidents. The basic plan and the functional and hazard-specific annexes outline an organized, systematic method to mitigate, prevent, prepare for, respond to, and recover from incidents. The plan discusses the expectations of staff; roles and responsibilities; direction and control systems; internal and external communications; training and sustainability; authority and references as defined by local, state, and federal government mandates; common and specialized procedures; and specific hazard vulnerabilities and responses/recovery.

C. Coordination with Emergency First Responders

Various agencies and services are involved in responding to school incidents, including emergency responders from law enforcement, safety, fire, emergency agencies, as well as mental health and other community organizations. An important component of the School EOP is advanced planning with various federal, state, and/or local agencies and community service providers to aid in timely communication and response to an incident. Advance planning may or may not include written agreements to help coordinate services between the agencies and school. If mutual aid agreements are created, a copy should be maintained with other important documents related to this safety plan. Advanced planning should specify the type of communication and services provided by one agency to another.

D. Situation Overview/Hazard Analysis Summary

1. School Population

a. General Population

Current enrollment at [School name] is approximately [number of students] [elementary, middle-school or high-school] students located in [brief description of the building(s)]. These students are supported by a committed staff and faculty consisting of:

- ☐ [number] Teachers and specialists
- ☐ [number] Administrators
- ☐ [number] Office/support staff
- ☐ [number] Instructional Assistants
- ☐ [number] Cafeteria staff
- ☐ [number] Maintenance and custodial staff

A master schedule of where classes, grade levels, and staff are located during the day is provided to each classroom and is available [identify manner kept: hard copy and/or electronic and location: in main office and/or some other safe and readily available place].

b. Functional Needs Population

[School name] is committed to the safe evacuation and transport of students and staff with functional needs. The functional needs population includes, but is not limited to, students/staff with:

- ☐ Limited English proficiency,
- ☐ Blindness or visual disabilities,
- ☐ Cognitive or emotional disabilities,
- ☐ Deafness or hearing loss,
- ☐ Mobility/physical disabilities (permanent and temporary), and
- ☐ Medically fragile health (including asthma and severe allergies).

The school's current enrollment of students with functional needs is approximately [number of students]; however, this number will fluctuate. Students and/or staff may require additional assistance if they are temporarily on crutches, wearing casts, etc.

Classrooms containing students and staff that require additional assistance during an incident will be noted by an asterisk next to the room number during the applicable class period(s) on the master schedule. The list of students and staff names with functional needs along with their schedules is available [identify manner kept: hard copy and/or electronic and location: in main office and/or some other safe and readily available place]. A list of staff members that have been trained and assigned to assist the functional needs population during drills, exercises, and incidents is also available [identify manner kept: hard copy and/or electronic and location: in main office and/or some other safe and readily available place].

2. Building Information

[School name] is located on a [number] acre lot and includes [number] buildings, [describe athletic and parking and/or other facilities]. All classes take place in [describe building(s)].

A map and/or floor plans of the buildings annotated with evacuation routes, shelter locations, fire alarm pull stations, fire hydrants, fire extinguishers, first aid kits, hazardous materials storage, and utility shutoffs is included at the beginning of this plan. All staff members are required to know these locations as well as how to operate the utility shutoffs.

3. Hazard Analysis Summary

[School name] is exposed to many hazards which have the potential for disrupting the school community, causing casualties, and damaging or destroying public or private property. Understanding that the [name of your County] Emergency Management Agency maintains an Emergency Operations Plan (EOP) to address hazards and incidents, the [School name] EOP has been developed to fit into the larger [name of your County] EOP in the event of a large-scale incident.

Table 1 on the following page briefly discusses high-priority hazards that [School name] has identified through a hazards assessment of each school building and its surrounding area, conducted either by school officials or in conjunction with officials of the [name of your County] Emergency Management Agency and the County's Emergency Operations Plan, local law enforcement, fire, and other community safety partners.

For example, a school may be located near railroads where numerous hazardous materials are transported. A derailment could force an evacuation and implementation of other emergency procedures. The high-priority hazards table should be customized to include content specific to your school community.

TABLE 1. HIGH-PRIORITY HAZARDS (To be customized to meet school circumstances)

Flood	Flooding is a natural feature of the climate, topography, and hydrology of [School name] and its surrounding areas. Flooding predominates throughout the winter and early spring due to melting snow, breakaway ice, and rainy weather. [Identify specific information such as building "A" is located 50 feet from a waterway and customize the best practice Flood annex in your plan to account for circumstances unique to your school and flooding hazards]
Severe Weather	[Identify the type of weather conditions typical to your school, ie, high winds, tornados, heavy snow and/or ice, and specific information that is critical to your safety plan and emergency operations; customize the Severe Weather annex in your plan to account for circumstances unique to your school and weather hazards]
Intruder/ Hostage	[Continue to identify any specific hazards information and customize the relevant annex to your plan on these and/or other topics]
Active Shooter	
Bomb Threat	
Bus Accident	
Fire/ Explosion	

E. Planning Assumptions and Limitations

1. Planning Assumptions

Planning assumptions allow for deviation from the plan if certain assumptions prove not to be true during operations. The following are standard assumptions. Additional assumptions may be needed depending on your school's circumstances:

- ☐ The school community will continue to be exposed and subject to hazards and incidents described in the Hazard Analysis Summary, as well as lesser hazards and others that may develop in the future.
- ☐ A major disaster could occur at any time and at any place. In many cases, dissemination of warning to the public and implementation of increased readiness measures may be possible; however, some emergency situations occur with little or no warning.
- ☐ A single site incident (e.g., fire, gas main breakage) could occur at any time without warning and the employees of the school affected cannot and should not, wait for direction from local emergency response agencies. Action is required immediately to save lives and protect school property.
- ☐ Following a major or catastrophic incident, the school may have to rely on its own resources to be self-sustaining for up to 72 hours.
- ☐ There may be a number of injuries of varying degrees of seriousness to faculty, staff, and/or students. Rapid and appropriate response will reduce the number and severity of injuries.
- ☐ Outside assistance from local fire, law enforcement and emergency managers will be available in most serious incidents. Because it takes time to request and dispatch external assistance, it is essential for the school to be prepared to carry out the initial incident response until responders arrive at the incident scene.
- ☐ Proper prevention and mitigation actions, such as creating a positive school environment and conducting fire and safety inspections, will prevent or reduce incident- related losses.
- ☐ Maintaining the School EOP and providing frequent opportunities for stakeholders (staff, students, parents, emergency responders, etc.) to exercise the plan through live drills and table-top exercises can improve the school's readiness to respond to incidents.
- ☐ A spirit of volunteerism among school employees, students and families will result in their providing assistance and support to incident management efforts.

2. Planning Limitations

It is the policy of [School name] that no guarantee is implied by this plan of a perfect incident management system. As personnel and resources may be overwhelmed, [School name] can only endeavor to make every reasonable effort to manage the situation with the resources and information available at the time.

II. CONCEPT OF OPERATIONS

The overall strategy of a School EOP is to execute effective and timely decisions and actions that prevent harm, protect lives and property, mitigate damages, restore order and aid recovery.

This plan is based upon the concept that the incident management functions that must be performed by the school generally parallel some routine day-to-day functions. To the extent possible, the same personnel and material resources used for day-to-day activities will be employed in responding to an incident in the school. Because personnel and equipment resources are limited, some routine functions that do not contribute directly to the incident may be suspended. The personnel, equipment and supplies that would typically be required for those routine functions will be redirected to accomplish assigned incident management tasks.

In addition, the incident may require coordinated operations with others. The key to successful operations is an organized command structure. It is important to understand that the school's command of the incident and the school's incident management structure may change once official emergency responders arrive on the scene. Emergency responders are knowledgeable in the Incident Command System (ICS) and may be best equipped to command the response to a specific incident. If this is to occur, the school may transition command of the incident to a more qualified Incident Commander (IC). These concepts are more fully discussed below.

It is critical for school administration officials and all segments of the community emergency response system to work together in advance of an incident to develop a working relationship and understanding of how the school's initial response would transition into the overall response to a critical incident at the school.

A. National Incident Management System (NIMS)

The National Incident Management System (NIMS) is a set of principles that provides a systematic, proactive approach guiding government agencies, nongovernmental organizations and the private sector to work seamlessly to prevent, protect against, respond to, recover from and mitigate the effects of incidents, regardless of cause, size, location, or complexity, to reduce the loss of life or property and harm to the environment. This system ensures that those involved in incident response/recovery understand their roles and have the tools they need to be effective.

According to Homeland Security Presidential Directive 5 and the U.S. Department of Education, school districts are among local agencies that must adopt NIMS if they receive Federal grant funds.

[School name] recognizes that staff and students will be first responders during an incident. Adopting NIMS enables staff and students to respond more effectively to an incident and enhances cooperation, coordination, and communication among school officials, first responders, and emergency managers.

As part of its NIMS implementation, [School name] participates in the local government's NIMS preparedness program to remain NIMS compliant and believes it is essential to ensure that response/recovery services are delivered to schools in a timely and effective manner. NIMS compliance for school districts includes completing the following:

- ☐ Adopt the use of the Incident Command System (ICS). All staff and students who assume roles described in this plan will receive ICS-100 training.
- ☐ Complete NIMS awareness course IS-700 NIMS: An Introduction.
- ☐ Participate in local government's NIMS preparedness program and incorporate the School EOP into the [name of your County] EOP.
- ☐ Train and exercise the plan. All staff and students are expected to participate in training and exercising the plan's procedures and hazard-specific incident plans. The school is charged with ensuring that the training and equipment necessary for an appropriate response/recovery operation are in place.

B. Initial Response and Implementation of the Incident Command System (ICS)

In a major emergency or disaster, [School name] may be damaged or need to be evacuated, people may be injured, and/or other incident management activities may need to be initiated. School personnel are usually first on the scene of an incident in a school setting. School officials and staff are expected to take charge and manage the incident until it is resolved or command is transferred to someone more qualified, usually an emergency responder agency with legal authority to assume responsibility. School personnel will seek guidance and direction from local officials and technical assistance from state and federal agencies where appropriate.

All activities necessary in managing an incident must be organized and coordinated to ensure the most efficient response. The Incident Command System (ICS) will be used to manage all incidents.

Until non-school emergency responders arrive on-scene, the School Decision-Maker (usually the principal or his/her designee) is responsible for activating the School EOP, including common and/or specialized procedures, as well as hazard-specific incident plans. The School Decision-Maker shall designate a School Incident Commander with authority to direct all incident activities. The designated School Incident Commander should be the person most qualified to manage the specific type of incident.

Once an emergency responder agency with legal authority to assume responsibility arrives on scene, the School Incident Commander should transition command to that Incident Commander and move to serving within the incident command structure.

Again, it is critical that school officials and all segments of the community emergency response system work together in advance of an incident to develop a working relationship and understanding of how the school's initial response would transition into the overall response to a critical incident at the school.

III. ORGANIZATION AND ASSIGNMENT OF RESPONSIBILITIES

This section establishes the operational organization that will be relied on to manage the incident and includes:

- ☐ A list of the kinds of tasks to be performed by position and organization.
- ☐ An overview of who does what.

A building principal and/or assistant principals are not always able to manage all the aspects associated with an incident without assistance. As indicated, the Incident Command System (ICS) uses a team approach to manage incidents and allows school officials to assign tasks to other key school personnel.

Staff are assigned to serve within the ICS based on their expertise and training and the needs of the incident. Roles should be pre-assigned based on training and qualifications. Each staff member and volunteer must be familiar with his or her role and responsibilities before an incident occurs. School staff may be required to remain at school to assist in an incident.

A. Principal/Building Administrator

The principal/designee may serve as the School Incident Commander or delegate that authority to a qualified individual. While the principal retains the overall responsibility for the safety of students and staff, delegating certain duties to manage the incident may allow the principal to focus on policy-level activities and interfacing with other agencies and parents. The principal shall coordinate between the Superintendent's office and the School Incident Commander.

B. School Incident Commander

The School Incident Commander will establish an Incident Command Post (ICP) and provide an assessment of the situation to the principal/designee or other officials, identify resources required, and direct the on-scene incident management activities. The Incident Commander's responsibilities include:

- ☐ Assuming overall direction of all incident management activities based on procedures outlined in the School EOP.
- ☐ Taking steps deemed necessary to ensure the safety of students, staff and other individuals.
- ☐ Determining whether to implement incident management protocols established in the School EOP (e.g., Evacuation, Reverse Evacuation, Shelter in Place, etc. as described more fully in the annexes).
- ☐ Arranging for transfer of students, staff and other individuals when safety is threatened by a disaster.
- ☐ Working with and ensuring communication with emergency services personnel.
- ☐ Keeping the principal and other officials informed of the situation.

- ☐ Ensuring the proper transfer of command when/if a more qualified Incident Commander arrives on scene.

C. Teachers

Teachers shall be responsible for the supervision of students and shall remain with students until directed otherwise. Responsibilities include:

- ☐ Supervising students under their charge.
- ☐ Taking steps to ensure the safety of students, staff and other individuals in the implementation of incident management protocols established in the School EOP.
- ☐ Directing students in their charge to inside or outside assembly areas, in accordance with signals, warning, written notification or intercom orders according to incident management procedures established in the School EOP.
- ☐ Taking attendance when class relocates to an outside or inside assembly area or evacuates to another location.
- ☐ Reporting missing students to the Incident Commander.
- ☐ Executing assignments as directed by the Incident Commander.
- ☐ Obtaining first-aid services for injured students from the school nurse or person trained in first-aid. Arrange for first-aid for those unable to be moved.
- ☐ Rendering first-aid if necessary. School staff will be trained and certified in first-aid and CPR.

D. Instructional Assistants

Responsibilities include assisting teachers as directed.

E. Counselors, Social Workers, and Psychologists

Counselors, social workers and psychologists provide assistance with the overall direction of the incident management procedures at the site. Responsibilities may include:

- ☐ Taking steps to ensure the safety of students, staff and other individuals in the implementation of incident management protocols established in the School EOP.
- ☐ Rendering first-aid if necessary.
- ☐ Assisting in the transfer of students, staff and other individuals when their safety is threatened by a disaster.
- ☐ Executing assignments as directed by the Incident Commander.
- ☐ Assisting with crisis intervention and recovery processes.

F. School Nurses/Health Assistants

Responsibilities include:

- ☐ Administering first-aid or emergency treatment as needed.
- ☐ Supervising administration of first-aid by those trained to provide it.
- ☐ Organizing first-aid and medical supplies.

G. Custodians/Maintenance Personnel

Responsibilities include:

- ☐ Surveying and reporting building damage to the Incident Commander.
- ☐ Controlling main shutoff valves for gas, water and electricity and ensure that no hazard results from broken or downed lines.
- ☐ Providing damage control as needed.
- ☐ Assisting in the conservation, use and disbursement of supplies and equipment.
- ☐ Keeping the Incident Commander informed of school conditions.

H. School Secretary/Office Staff

Responsibilities include:

- ☐ Answering phones and assisting in receiving and providing consistent information to callers.
- ☐ Providing for the safety of essential school records and documents.
- ☐ Executing assignments as directed by the Incident Commander.
- ☐ Providing assistance to the principal.
- ☐ Monitoring radio emergency broadcasts.
- ☐ Assisting with health incidents as needed, acting as messengers, etc.

I. Food Service/Cafeteria Workers

Responsibilities include:

- ☐ Using, preparing, and serving food and water on a rationed basis when the feeding of students and staff becomes necessary during an incident.
- ☐ Executing assignments as directed by the Incident Commander.

J. Bus Drivers

Responsibilities include:

- ☐ Supervising the care of students if disaster occurs while students are on a bus.
- ☐ Transferring students to new location when directed.
- ☐ Executing assignments as directed by the Incident Commander.
- ☐ Transporting individuals in need of medical attention.

K. Other Staff (e.g., Itinerant Staff, Substitute Teachers)

Responsibilities include reporting to the Incident Commander for assignments, if requested to do so.

L. Students

Responsibilities include:

- ☐ Cooperating during emergency drills and exercises and during an incident.
- ☐ Learning to be responsible for themselves and others in an incident.
- ☐ Understanding the importance of not being a bystander by reporting situations of concern.
- ☐ Developing an awareness of natural, technological, and human-caused hazards and associated prevention, preparedness and mitigation measures.
- ☐ Taking an active part in school incident response/recovery activities, as age appropriate.

M. Parents/Guardians

Responsibilities include:

- ☐ Encouraging and supporting school safety, violence prevention and incident preparedness programs within the school.
- ☐ Participating in volunteer service projects for promoting school incident preparedness.
- ☐ Providing the school with requested information concerning the incident, early and late dismissals, and other related release information.
- ☐ Practicing incident management preparedness in the home to reinforce school training and ensure family safety.
- ☐ Understanding their roles during a school emergency.

IV. DIRECTION, CONTROL, AND COORDINATION

A. School Incident Command System

A school's command system can be used to manage emergency incidents or non-emergency events such as graduations, athletic events, or celebrations. The system is flexible to meet the school's needs. See Figure 1 on next page.

Figure 1. School Incident Command System

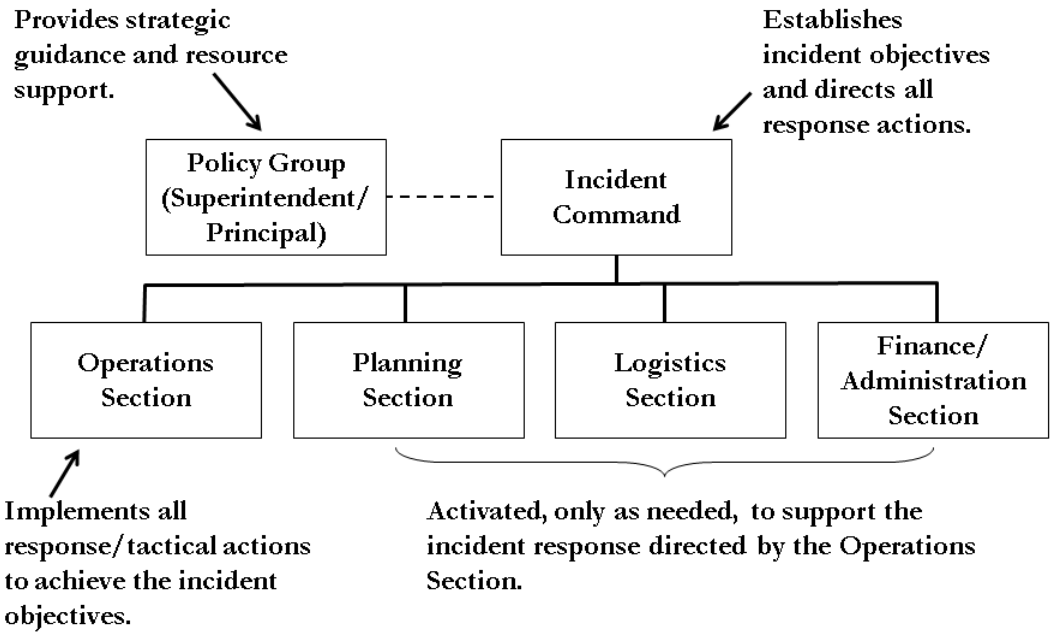

Staff are assigned to serve within the ICS based on their expertise and training and the needs of the incident. Roles should be pre-assigned based on training and qualification. The School ICS is organized into the following functional areas:

1. School Incident Commander

Directs tactical on-scene operations until/unless a coordinated incident command system (ICS) is established with local authorities. In complex incidents, a Policy/Coordination Group may be convened at the school district operations center. The role of the Policy/Coordination Group is to:

- ☐ Support the on-scene Incident Commander.
- ☐ Provide policy and strategic guidance.
- ☐ Help ensure that adequate resources are available.
- ☐ Identify and resolve issues common to all organizations.
- ☐ Keep elected officials and other executives informed of the situation and decisions.
- ☐ Provide factual information, both internally and externally. See Part V of this plan on Communications for additional information related to role/responsibility of an information officer.

The [School name] Principal/designee and/or School Incident Commander will keep the Policy/Coordination Group informed.

2. Operations Section

When activated, the Operations Section coordinates all tactical operations including implementation of response/recovery activities according to procedures and protocols established by [name of School] in an incident action plan. Procedures and protocols will address care of students, first-aid, crisis intervention, search and rescue, site security, damage assessment, evacuations and the release of students to parents. Specific responsibilities include:

- ☐ Analyzing school staffing to develop a Family Reunification Plan, and implementation.
- ☐ Monitoring site utilities (i.e., electric, gas, water, heat/ventilation/air conditioning) and shutting them off only if danger exists or if directed by the Incident Commander and assisting in securing facility.
- ☐ Establishing medical triage with staff trained in first-aid and CPR, providing and overseeing care given to injured persons, distributing supplies and requesting additional supplies.
- ☐ Providing and accessing psychological first-aid services for those in need and accessing local/regional providers for ongoing crisis counseling for students, staff and parents.
- ☐ Coordinating the rationed distribution of food and water, establishing secondary toilet facilities in the event of water or plumbing failure and requesting needed supplies.
- ☐ Documenting all activities.

See Table 2 on the next page for the types of Strike Teams that may be established within the Operations Section.

TABLE 2. OPERATIONS SECTION TEAMS

Search & Rescue Teams search the entire school facility, entering only after they have checked the outside for signs of structural damage and determined that it is safe to enter. Search & Rescue Teams are responsible for ensuring that all students and staff evacuate the building (or, if it is unsafe to move the persons, that their locations are documented so that professional responders can locate them easily and extricate them). Search and Rescue Teams are also responsible for:

- ☐ Identifying and marking unsafe areas.
- ☐ Conducting initial damage assessment.
- ☐ Obtaining injury and missing student reports from teachers.

First-Aid Teams provide triage, treatment, and psychological first-aid services. First-Aid Teams are responsible for:

- ☐ Setting up first-aid area for students.
- ☐ Assessing and treating injuries.
- ☐ Completing master injury report.

Evacuation/Shelter/Care Team. Evacuation, shelter and student care in an incident are among the most important tasks faced by schools. These tasks include student accounting, protection from weather, providing for sanitation needs and providing for food and water. This team is responsible for:

- ☐ Accounting for the whereabouts of all students, staff and volunteers.
- ☐ Setting up a secure assembly area.
- ☐ Managing sheltering and sanitation operations.
- ☐ Managing student feeding and hydration.
- ☐ Coordinating with the Student Release Team.
- ☐ Coordinating with the Logistics Section to secure the needed space and supplies.

Facility & Security Response Team is responsible for:

- ☐ Locating all utilities and turning them off, if necessary.
- ☐ Securing and isolating fire/HazMat.
- ☐ Assessing and notifying officials of fire/HazMat.
- ☐ Conducting perimeter control.

Crisis Intervention Team is responsible for:

- ☐ Assessing need for onsite mental health support.
- ☐ Determining need for outside agency assistance.
- ☐ Providing onsite intervention /counseling resources.
- ☐ Monitoring well-being of School Incident Command Team, staff and students and reporting all findings to the Operations Section Chief.

Student Release/Reunification Team. Responsible for getting students reunited with their parents or guardians in an efficient and orderly manner. This can be an enormous challenge and takes a lot of planning. This team is responsible for:

- ☐ Setting up secure reunion area.
- ☐ Checking student emergency cards for authorized releases and completing release logs.
- ☐ Coordinating information officers on internal and external communications and messages.

3. Planning Section

When activated, the Planning Section is responsible for collecting, evaluating and disseminating information needed to measure the size, scope and seriousness of an incident and planning appropriate incident management activities. Duties may include:

- ☐ Assisting the Incident Commander in the collection and evaluation of information about an incident as it develops, assisting with ongoing planning efforts and maintaining the incident time log.
- ☐ Documenting all activities.

4. Logistics Section

When activated, the Logistics Section supports incident management operations by securing and providing needed personnel, equipment, facilities, resources and services required for incident resolution; coordinating personnel; assembling and deploying volunteer teams; and facilitating communication among incident responders. This function may involve a major role in an extended incident. Additional responsibilities include:

- ☐ Establishing and overseeing communications center and activities during an incident (two-way radio, battery-powered radio, written updates, etc.), and developing a telephone tree for after-hours communication.
- ☐ Establishing and maintaining school and classroom first-aid kits, coordinating access to and distribution of supplies during an incident and monitoring inventory of supplies and equipment.
- ☐ Documenting all activities.

5. Finance/Administration Section

When activated, the Finance/Administration Section oversees all financial activities including purchasing necessary materials, tracking incident costs, arranging contracts for services, timekeeping for emergency responders, submitting documentation for reimbursement and recovering school records following an incident. Additional duties may include:

- ☐ Assuming responsibility for overall documentation and recordkeeping activities; when possible, photographing or videotaping damage to property.
- ☐ Developing a system to monitor and track expenses and financial losses and secure all records.

School and school district management offices may assume responsibility for these functions and perform these duties off-site.

Remember that staff are assigned to serve within the School Incident Command System (ICS) based on their expertise and training and the needs of the incident. Roles should be pre-assigned based on training and qualification.

Table 3 provides example titles for specific roles within the School ICS. This Table can be completed for each of the various hazards in the annexes of this plan with specific staff assigned to each role along with emergency contact information. Each of these assignments are maintained with other important plan documents [identify manner kept: hard copy and/or electronic and location: in main office and/or some other safe and readily available place].

TABLE 3 SCHOOL INCIDENT COMMAND SYSTEM

Principal or Designee
School Incident Commander
1. Assistant Principal 2._____
Alternate School Commander(s)
**Please include current contact information for every person listed on this chart*

Public Information Officer
Communications Director
Alternates
1. Assistant PIO 2._____
Acts as a liaison between school and public (including media)

Policy Group
1. Superintendent
2. Communications Director/PIO
3. School Attorney or other key staff
Support Incident Commander, provide guidance on policy, help resolve issues and find resources, assist with communications.

Operations
Assistant Principal
Alternates
1. Safety Officer
2._____
Handle all emergency response jobs, including taking care of students as well as handling the challenges of the emergency.

Planning
Assistant Principal
Alternates
1. Admin. Assistant
2._____
Responsible for tracking both available and needed resources, assessing the changing situation, documenting the response and managing the large site map at the Command Post.

Logistics
Chief Custodian
Alternates
1._____
2._____
Manages personnel, supplies and equipment During a response, the Logistics Team is responsible for handing out supplies, equipment and deploying unassigned people for work.

Finance & Administration
Budget/Finance Director
Alternates
1._____
2._____
Responsible for buying materials and keeping financial records of expenditures and employee hours

B. Source and Use of Resources

[School name] will use its own resources and equipment to respond to incidents until emergency or other incident response personnel arrive. Parent volunteers and community members have been trained to assist, if called upon, and are available after an incident occurs. The following organizations or agencies [list should be customized to your school and community resources] have agreed to be responsible for providing additional resources or assistance:

- ☐ First-aid kit and sanitation supplies will be provided by: [insert provider name]
- ☐ Cots and bedding supplies will be provided by: [insert provider name]
- ☐ Food/water supplies will be provided by: [insert provider name]
- ☐ Security will be provided by: [insert provider name]
- ☐ Counseling services will be provided by: [insert provider name]

V. COMMUNICATIONS

Communication is a critical part of incident management. This section outlines [School name]'s communications plan and supports its mission to provide clear, effective internal and external communication between the school, staff, students, parents, emergency responders, the community and media.

The School EOP must include policies and procedures governing school incident communications with law enforcement and emergency responders, as well as with students, parents, staff, the school community, and the media. Templates for statements/press releases to the media, and a detailed communications plan, including standard procedures and protocols should be developed and made available in advance of an incident.

Templates for statements/ press releases, the communication plan and media contacts at the major television, Internet, and radio stations are maintained by [insert position] and located [identify manner kept: hard copy and/or electronic and location: in main office and/or some other safe and readily available place].

A. Communication Between School and with Law Enforcement and Emergency Responders

[School name] utilizes the Communication Platform/Capabilities described in the beginning of the School EOP to contact and maintain communications with law enforcement and other emergency responders during an incident. The School Incident Commander will transfer command to the appropriate emergency responder who arrives on the scene to assume management of the incident, including coordination of internal and external communications. The Incident Commander will use the communication platform [and/or other means] described in the School EOP to notify the principal/designee of the school's status/needs. [School name] and emergency responders will coordinate the release of information to ensure that information is consistent, accurate and timely.

B. Internal Communications

[School name] has identified a school spokesperson or public information officer who will be responsible to [add additional duties, as appropriate]:

- ☐ Help create the policies and plans for communicating emergency information internally and to the public.
- ☐ Follow the communications policies and procedures established by [School name].
- ☐ Help establish alternative means to provide information in the event of a failure of power, phone or other lines of communication.
- ☐ Develop materials for use in media briefings.
- ☐ Act as the contact for emergency responders and assist in coordination of media communications.

1. Communication Between School Officials and Staff Members

School personnel will be notified when an incident occurs and kept informed as additional information becomes available and as plans for management of the incident evolve. The following practices [the list should be customized to fit your school's communication options] will be utilized to disseminate information internally when appropriate:

- ☐ **Telephone Tree:** A telephone tree is a simple, widely used system for notifying staff of an incident when they are not at school. The tree originates with the principal/designee, who contacts the members of the School Incident Command Team. Team members then in turn will contact groups of staff (teachers, administrators and support staff).
- ☐ **Text-Messaging System/E-mail System:** A text-messaging or e-mail system is available to provide those who are registered to receive messages with updates during an incident.
- ☐ **Morning Faculty Meeting:** As appropriate, updated information about an incident will be presented at the morning faculty meeting. Any new procedures for the day will also be reviewed at this time.
- ☐ **End-of-Day Faculty Meeting:** As appropriate, updated information and a review of the day's events will be presented at the end-of-day meeting. Staff will also have the opportunity to address any misinformation or rumors.

C. External Communications

School officials must communicate with the larger school community on how incidents will be addressed on a regular basis. However, once an incident does occur, parents, media and the community at large will require clear and concise messages from [School name] about the incident, what is being done and the safety of the children and staff.

1. Communication with Parents

Before an incident occurs, [School name] will:

- ☐ Develop a relationship with parents so that they trust and know how to access alerts and incident information.
- ☐ Inform parents about the School's EOP, its purpose, and its objectives, although detailed response tactics should not be shared if they will impede the safe response to an incident.
- ☐ Information will be included in [describe your school's method, ie, school newsletter, presentation delivered at Back-to-School event, etc.].
- ☐ Identify parents who are willing to volunteer in case of an incident and include them in preparation efforts and training.
- ☐ Be prepared with translation services for non-English-speaking families and students with limited English proficiency.

In the event of an incident, [School name] will:

- ☐ Disseminate information [identify means such as via text messages, e-mail, radio announcements, hot-line, etc.] to inform parents about what is known to have happened.
- ☐ Implement a plan to manage phone calls and parents who arrive at school.
- ☐ Describe how the school and school district are handling the situation.
- ☐ Provide information regarding possible reactions of their children and ways to talk with them.
- ☐ Provide a phone number, Web site address, or recorded hotline where parents can receive updated incident information.
- ☐ Inform parents and students when and where school will resume.

After an incident, [School name] administrators will schedule and attend an open question-and-answer meeting for parents as soon as possible.

2. Communication with the Media

In the event of an incident, the School Incident Commander or the emergency responder Incident Commander (in the event command has been transferred), will coordinate with the school public information officer and/or participate in a joint information effort to [list should be customized by school]:

- ☐ Establish a media site and reception area away from the school and any established Incident Command Post.
- ☐ Provide regular updates to media and school community.
- ☐ Provide only information that has been approved to be released by the Incident Commander in charge of the scene.
- ☐ Monitor release of information and correct misinformation.
- ☐ Coordinate messages with the principal/designee.

All [School name] employees are to refer all requests for information and questions to the designated Public Information Officer [or joint informational personnel].

3. Handling Rumors

In addressing rumors, the most effective strategy is to provide facts as soon as possible. To combat rumors, [School name] will:

- ☐ Provide appropriate information to internal groups, including administrators, teachers, students, custodians, secretaries, instructional assistants, cafeteria workers and bus drivers. These people are primary sources of information and are likely to be contacted in their neighborhoods, at grocery stores, etc.
- ☐ Hold a faculty/staff meeting before staff members are allowed to go home so that what is (and is not) known can be clearly communicated.
- ☐ Designate and brief personnel answering calls to help control misinformation.
- ☐ Conduct briefings for community representatives directly associated with the school.
- ☐ Enlist the help of the media to provide frequent updates to the public, especially to provide accurate information where rumors need to be dispelled.

After the immediate incident response period, [School name] will conduct public meetings as needed. These meeting are designed to provide the opportunity for people to ask questions and receive accurate information.

D. Communication Tools

Some common internal and external communication tools that [School name] uses, include the following [customize to your school's resources]:

- ☐ **Standard telephone:** [School name] has designated a school telephone number as a recorded "hotline" for parents to call for information during incidents. The goal is to keep other telephone lines free for communication with emergency responders and others.
- ☐ **Cellular telephones:** These phones may be the only tool working when electric service is out; they are useful to school personnel en route to or from a site.
- ☐ **Intercom systems:** The intercom system includes teacher-initiated communication with the office using a handset rather than a wall-mounted speaker.
- ☐ **Bullhorns and megaphones:** A battery-powered bullhorn to address students and staff who are assembling outside the school. Procedures governing storage and use will help ensure readiness for use.
- ☐ **Two-way radio:** Two-way radios provide a reliable method of communication between rooms and buildings at a single site. All staff will be trained to understand how to operate the two-way radio.
- ☐ **Computers:** A wireless laptop computer may be used for communication both within the school and to other sites. Email may be a useful tool for updating information for staff, other schools in an affected area and the district

superintendent. An assigned staff member(s) will post information such as school evacuation, closure or relocation on the home page of the school and district Web site.

- ☐ **Fax machines:** Possible uses include off-site access to receive and send critical information concerning students and staff members, their locations, and needed telephone numbers, including but not limited to, medical information, release forms and authorizations.
- ☐ **Alarm systems:** Bells or buzzers are in place and sound in different ways to signal different types of incidents – for example, fire, lockdown, or special alert (with instructions to follow). All school staff, students, and volunteers will be trained on what the sounds mean and how to respond to them.
- ☐ **Whistles:** Whistles should be provided to staff in order to signal a need for immediate attention or assistance.

VI. RECOVERY AFTER AN INCIDENT

After the safety and status of staff and students have been assured and emergency conditions have abated following an incident, staff, teachers and school officials will assemble to support the restoration of the school's educational programs. Defining mission-critical operations and staffing this effort is the starting point for the recovery process. Collecting and disseminating information will also facilitate the recovery process.

[School name] and the [name of School District] will designate appropriate personnel and collaborate with external resources to work in teams to accomplish the following [identify personnel and activities, depending on your school's resources and type of incident at issue]:

- ☐ Conduct a comprehensive assessment of the physical and operational recovery needs.
- ☐ Assess physical security, data access and all other critical services (e.g., plumbing, electrical).
- ☐ Examine critical information technology assets and personnel resources and determine the impact on the school operations for each asset and resource that is unavailable or damaged.
- ☐ Document damaged facilities, lost equipment and resources and special personnel expenses that will be required for insurance claims and requests for state and federal assistance.
- ☐ Identify recordkeeping requirements and sources of financial aid for state and federal disaster assistance.
- ☐ Provide detailed facilities data to the school district office so that it can estimate temporary space reallocation needs and strategies.
- ☐ Arrange for ongoing status reports during the recovery activities to: a) estimate when the educational program can be fully operational; and b) identify special facility, equipment and personnel issues or resources that will facilitate the resumption of classes.
- ☐ Educate school personnel,students and parents on available crisis counseling services.

- ☐ Establish absentee policies for teachers/students after an incident.
- ☐ Establish an agreement with mental health organizations to provide counseling to students and their families after an incident.
- ☐ Develop alternative teaching methods for students unable to return immediately to classes: correspondence classes, videoconferencing, telegroup tutoring, etc.
- ☐ Create a plan for conducting classes when facilities are damaged (e.g., alternative sites, half-day sessions, portable classrooms).
- ☐ Get stakeholder input on prevention and mitigation measures that can be incorporated into short-term and long-term recovery plans.

VII. ADMINISTRATION, FINANCE AND LOGISTICS

A. Agreements and Contracts

If school resources prove to be inadequate during an incident, [School name] will request assistance from local emergency services, other agencies and the school community in accordance with existing mutual aid agreements and contracts. Such assistance includes equipment, supplies and/or personnel. All agreements entered into by authorized school officials should be in writing. All pre-negotiated agreements and contracts are [identify manner kept: hard copy and/or electronic and location: in main office and/or some other safe and readily available place].

B. Recordkeeping

1. Administrative Controls

[School name] is responsible for establishing the administrative controls necessary to manage the expenditure of funds and to provide reasonable accountability and justification for expenditures made to support incident management operations. These administrative controls will be done in accordance with established local fiscal policies and standard cost accounting procedures.

2. Activity Logs

Staff assigned within the School ICS will maintain accurate logs recording key incident management activities, including:

- ☐ Activation or deactivation of incident policies, procedures and resources.
- ☐ Significant changes in the incident situation.
- ☐ Major commitments of resources or requests for additional resources from external sources.
- ☐ Issuance of protective action recommendations to the staff and students.
- ☐ Evacuations.
- ☐ Casualties.
- ☐ Containment or termination of the incident.

C. Incident Costs

School ICS Finance and Administration staff are responsible for maintaining records summarizing the use of personnel, equipment and supplies to obtain an estimate of annual incident response costs that can be used in preparing future school budgets. The detailed records of costs for incident management and operations include:

- ☐ Personnel costs, especially overtime costs.
- ☐ Equipment operations costs.
- ☐ Costs for leased or rented equipment.
- ☐ Costs for contract services to support incident management operations.
- ☐ Costs of specialized supplies expended for incident management operations.

These records may be used to recover costs from the responsible party or insurers, or as a basis for requesting financial assistance for certain allowable response and recovery costs from the state and/or federal government.

D. Preservation of Records

In order to continue normal school operations following an incident, vital records must be protected. These include legal documents and student files as well as property and tax records. The principal causes of damage to records are fire and water. Essential records should be protected and are maintained [identify manner kept: hard copy and/or electronic and location: in main office and/or some other safe and readily available place].

VIII. PLAN DEVELOPMENT, MAINTENANCE, AND DISTRIBUTION

A. Approval and Dissemination of the Plan

In developing the safety plan for each building, the board or governing authority must involve community law enforcement, fire, and safety officials, parents of students who are assigned to the building and teachers and nonteaching employees who are assigned to the building as described in R.C. 3313.536(A). The safety plan should clearly identify the latest revision date and the signature of individuals involved in its creation and/or revision.

B. Record of Distribution

Copies the school safety and floor plans will be distributed to emergency organizations with a role in responding to an incident. A record of distribution will be kept as proof that organizations have acknowledged their receipt, review and/or acceptance of the plan. School administrators will record the title and name of the person receiving the plan, the agency to which the receiver belongs, the date of delivery and the number of copies delivered. This record is [identify manner kept: hard copy and/or electronic and location: in main office and/or some other safe and readily available place]

School Safety Planning documents should not be shared with those who do not have a need to know the details of the plan unless all sensitive, security-related information has

been properly redacted. Copies of the plan may be made available to the public and media without the sensitive information at the discretion of the School Board.

C. Review and Updates to the Plan

In order to remain in compliance with R.C. 3313.536(B), the board or governing authority shall update the comprehensive safety plan at least once every three years and the floor plans whenever a major modification to the building requires changes in the procedures outlined in the plan. The board should, however, ensure an update to the plan is filed with the Ohio Attorney General's Office whenever any critical information in the plan changes. Each update or change to the plan will be tracked. The record of changes will include: the change number, the date of the change and the name of the person who made the change.

To ensure timely updates to the School EOP, the school board or governing authority has established a schedule for an annual review of planning documents. The basic plan and its annexes will be reviewed at least once per year by school officials and local emergency management agencies and others deemed appropriate by school administration.

The School EOP will be updated based upon changes in information; deficiencies identified during incident management activities and exercises; and when changes in threat hazards, resources and capabilities or school structure occur. Whenever the School EOP is updated, an updated copy shall be filed with the Ohio Attorney General's Office, to be made available through OHLEG, as well as distributed in accordance with the guidelines stated above.

D. Training and Exercising the Plan

[School name] understands the importance of training, drills, and table top exercises in maintaining and planning for an incident. To ensure that district personnel and community emergency responders are aware of their duties and responsibilities under the school plan and the most current procedures, the following training, drill and exercise actions will occur. School officials will coordinate training efforts with guidance from [your County] Emergency Management Agency.

Basic training and refresher training sessions will be conducted [insert schedule specifics, such as annually, etc.] for [identify appropriate school personnel] in coordination with local fire, law enforcement and emergency managers.

School EOP training includes:

- ☐ Hazard and incident awareness training for [identify staff and method of training].
- ☐ Orientation to the School EOP provided to [identify staff and method of training].
- ☐ First-aid and CPR for [identify staff and method of training].
- ☐ Team training to address specific incident response or recovery activities such as Family Reunification.

- ☐ Two online FEMA courses: ICS 100 and IS-700 to be taken, with documentation, by [identify staff and methods/location of documentation]. Both courses are available for free at FEMA's Emergency Management Institute:
  http://training.fema.gov/EMIWeb/IS/courseOverview.aspx?code=is-100.b
  http://training.fema.gov/EMIWeb/IS/courseOverview.aspx?code=is-700.a

Additional training will include drills and tabletop exercises. Drills will be conducted [insert time intervals]. Exercises will occur [insert time intervals]. Records of the training provided including date(s), type of training, and participant roster will be maintained and are located [identify manner kept: hard copy and/or electronic and location: in main office and/or some other safe and readily available place]. Approved parent volunteers and community members will also be incorporated into larger training efforts.

All [School name] staff members are encouraged to develop personal and family emergency plans. Each family should anticipate that a staff member may be required to remain at school following a catastrophic event. Knowing that the family is prepared and can handle the situation will enable school staff to do their jobs more effectively.

SCHOOL SAFETY PLANNING GLOSSARY

Hazards: Hazards shall include situations involving threats of harm to students, personnel and/or facilities. Hazards include but are not limited to natural, technological and human-caused incidents. Hazards may require an interagency response involving law enforcement and/or emergency services agencies, depending on the size and scope of the incident.

Incident: An incident is an occurrence – natural, technological, or human-caused – that requires a response to protect life or property.

Incident Command System (ICS): The response infrastructure designed under the National Incident Management System (NIMS) to facilitate effective and efficient management of an incident by (1) identifying key team roles and functions; (2) assessing staff skills; (3) pre-designating staff for each ICS function (command, operations, planning, logistics, finance/administration); (4) coordinating with community partners; and (5) providing for transfer or command and backup of resources.

Incident Commander: The individual responsible for overall policy, direction and coordination of the emergency response effort. Usually this will be the local emergency official on site who has legal jurisdiction over the incident.

Key Knox Box: A key Knox Box is a device where emergency keys to all parts of the school facility are stored.

Keyholder: The school should identify the individual with access to keys to all parts of the school facility in the event of a critical incident or hazard. This individual should be reachable at the telephone number listed in the event of an emergency.

Lockdown: The initial physical response to provide a time barrier. Lockdown is not a stand-alone defensive strategy. When securing in place this procedure should involve barricading the door and readying a plan of evacuation or counter tactics should the need arise.

National Incident Management System (NIMS): A set of principles that provides a systematic, proactive approach guiding government agencies, nongovernmental organizations, and the private sector to work seamlessly to prevent, protect against, respond to, recover from, and mitigate the effects of incidents, regardless of cause, size, location or complexity, to reduce the loss of life or property and harm to the environment. This system ensures that those involved in an incident understand their roles and have the tools they need to be effective.

School Decision Maker: The school should identify the individual at the building level, usually the principal, who is authorized to make decisions for the school in the event of a critical incident or hazard. This individual should be reachable at the telephone number listed in the event of an emergency. The School Decision Maker may or may not serve as the Incident Commander during a critical incident or emergency.

School Incident Commander: The school official who has been designated by the School Decision Maker, if not the same, who is authorized to make decisions for the school in the event of a critical incident or hazard. The School Incident Commander may transfer command to the emergency responder Incident Commander, such as law enforcement, fire, or other safety officials who assumes control of the incident. The School Incident Commander will usually continue to operate within the overall ICS structure.

Secondary School Decision Maker: The school should identify a secondary individual who is authorized to make decisions for the school in the event that the primary school decision maker is not available during an emergency situation. This individual should be reachable at the telephone number listed in the event of an emergency. The Secondary School Decision Maker may or may not serve as the Incident Commander during a critical incident or emergency.

SCHOOL SAFETY AUTHORITIES AND REFERENCES

- Homeland Security Act of 2002, PL 107-296 (Nov. 25, 2002).
- Robert T. Stafford Disaster Relief and Emergency Assistance Act, PL 100-707 (Nov. 23, 1988), amending the Disaster Relief Act of 1974, PL 93-288.
- NIMS, Department of Homeland Security, FEMA: http://www.fema.gov/national-incident-management-system.
- NIMS, Department of Homeland Security, FEMA: IS-700 National Incident Management System (NIMS) an Introduction: http://training.fema.gov/EMIWeb/IS/courseOverview.aspx?code=is-700.a.
- Homeland Security Presidential Directive No. 5 (2003).
- Ohio Revised Code Section 3313.536, School Safety Plans.
- Ohio Revised Code Section 3313.86, Health and Safety Review.
- Ohio Revised Code Section 3318.371, Assistance for Relocation or Replacement of Classroom Facilities due to Contamination.
- Ohio Revised Code Section 3313.712, Emergency Medical Authorization.
- FEMA: IS-100 Introduction to Incident Command System: http://training.fema.gov/EMIWeb/IS/courseOverview.aspx?code=is-100.b.
- Franklin County Emergency Management & Homeland Security Site Safety & Emergency Plan Template, Sept. 2012: http://www.franklincountyohio.gov/emahs/.
- Illinois School Emergency and Crisis Response Plan: http://www.isbe.net/safety/guide.htm.
- FEMA All-Hazards Training Document: http://training.fema.gov/EMIWeb/emischool/EL361Toolkit/assets/SamplePlan.pdf

FUNCTIONAL ANNEXES

Functional protocols are common procedures that may be implemented along with procedures of hazard-and-threat specific protocols when needed to respond to an emergency. For example, evacuation procedures are implemented along with procedures of a more specific fire protocol. Reverse evacuation procedures may be instituted along with procedures activated for a hazardous materials spill that occurs outside of the school building. Each functional protocol describes the purpose and responsibilities for that function. Schools should customize these functional protocols to fit their unique circumstances. A risk assessment conducted with local emergency and safety officials will assist in development of effective procedures and protocols.

All functional annexes should address:

- ☐ Situations under which the procedures should be used.
- ☐ Who has the authority to activate the procedures.
- ☐ Specific actions to be taken when the procedures are implemented.

To implement functional procedures:

- ☐ All staff and students should undergo training and participate in drills.
- ☐ Staff and bus drivers assigned to work with special needs students should undergo in depth training and drills.
- ☐ Emergency response personnel should review, provide input and assist in training and drills on the use of these procedures. This will help evaluate the appropriateness of the procedures in the plan and assist with modifications or updating as necessary to ensure that the procedures are sufficient to provide a safe environment for students, staff and visitors.

Functional Annexes do not repeat but build upon the information, guidance and processes/procedures within the basic School EOP.

CONTINUITY OF OPERATIONS PLAN (COOP)

I. PURPOSE

The purpose of a Continuity of Operations Plan (COOP) is to ensure that the school has procedures in place to maintain and/or rapidly resume essential operations after an incident has disrupted normal school operations, activities or services. COOP is critical to safety planning and a good business practice. The plan should anticipate a full range of potential incidents that could cause a temporary interruption of school operations to a complete shut-down of the school, requiring suspension of non-essential functions and/or relocation of essential functions to an alternative site for some period of time. A goal is to provide full operational capacity for essential functions within 12 hours after activation of COOP and sustain these functions for up to 30 days.

II. RESPONSIBILITIES

Delegation of authority and management responsibilities should be determined by School officials prior to an incident. COOP procedures should address responsibilities before, during and after an incident. Safety of students and school personnel is the first consideration. Strong internal and external communications systems and partnerships with appropriate organizations, contractors and providers of services should be developed so that resources are readily available if needed. Legal counsel should review delegations of authority to identify and address any possible legal restrictions.

Designated school personnel, in conjunction with the Principal/School Decision-Maker, will perform the essential functions listed in Table 1 on next page.

Table 1. Essential Functions Performed by COOP Personnel

Principal or Superintendent	• Determine when to close schools, and/or send students/staff to alternate locations. • Disseminate information internally to students and staff. • Communicate with parents, media, and the larger school community. • Identify a line of succession, including who is responsible for restoring business functions for school.
Principal/Assistant Principal and/or Department Heads	• Ensure systems are in place for rapid contract execution after an incident. • Identify relocation areas for classrooms and administrative operations. • Create a system for registering students (out of district or into alternative schools). • Brief and train staff regarding their additional responsibilities. • Secure and provide needed personnel, equipment and supplies, facilities, resources, and services required for continued operations. • Identify strategies to continue teaching (e.g., using the Internet, providing tutors for homebound students, rearranging tests). • Reevaluate the curriculum.
Custodians/Maintenance Personnel	• Work with local government officials to determine when it is safe for students and staff to return to the school buildings and grounds. • Manage the restoration of school buildings and grounds (debris removal, repairing, repainting and/or re-landscaping).
School Secretary/Office Staff	• Maintain inventory. • Maintain essential records (and copies of records) including school's insurance policy. • Ensure redundancy of records (records are kept at a different physical location). • Secure classroom equipment, books, and materials. • Restore administrative and record-keeping functions such as payroll, accounting and personnel records. • Retrieve, collect, and maintain personnel data. • Provide account payable and cash management services.
Counselors, Social Workers, and School Nurses/Health Assistants	• Establish academic and support services for students and staff/faculty. • Implement additional response and recovery activities according to established protocols.
Food Service/Cafeteria/ Bus Drivers	• Determine how transportation and food services will resume.

III. SPECIFIC PROCEDURES

A. Activation and Relocation

The Principal/School Decision-Maker will determine when to activate and implement COOP procedures and/or to relocate operations to an alternate site. Authority for activation may be delegated. The Principal/School Decision-Maker will activate COOP procedures whenever it is determined the school is not suitable for safe occupancy or functional operation. The district office will be notified and provided information and details regarding a relocation of operations.

B. Alert, Notification, and Implementation Process

The Principal/School Decision-Maker will activate the School EOP communication plan (telephone tree, cell phone, text message, hot-line, automated notification system, etc.) to notify students and school personnel of COOP activation and provide situation information, as available. Parents and/or guardians will also be alerted and notified of COOP activation and as important information becomes available.

C. Relocation Sites

The Principal/School Decision-Maker will identify relocation sites to maintain and/or restore operations and essential functions disrupted by an incident. Each school should have more than one potential relocation site. One site should be accessed by walking, if appropriate, and other site(s) by transportation services. Sites must have reliable logistical support, services, and infrastructure systems that can sustain operations for up to 30 days. Consideration should also be given to essential functions or services that can be conducted from a remote location in addition to a predetermined alternative facility.

D. Alternate Facilities

For estimated short-term (2-14 days) payroll and personnel operations, the alternative facility will be [identify name and location of the facility]. For a longer term relocation of operations and essential functions, alternative facilities are listed below:

Alternative Facility	Can replace this Primary Facility	Street Address	Contact Information
	Personnel/Admin Offices		
	School Building A		
	School Building B		

For each alternate facility, the essential resources, equipment, and software that will be necessary for resumption of operations at the site will be identified and plans developed for securing those resources. IT systems available at the site will need to be tested for compatibility with school's backup data.

E. Interoperable Communications/Backup Sites

As noted above, the [identify the chosen facility] will be used as a temporary alternative site for short-term disruptions involving payroll and personnel actions.

With a longer term and/or more comprehensive incapacity of the building, alternative relocation sites have been identified as noted above. [Include specific information about the infrastructure capacities and capabilities of the alternative sites, for example]:

> At alternative site [identify name and location], the lines and services for telephones and computers are maintained, protected, and backed up offsite by the district office. The hardware and physical lines are protected by the fire prevention, humidity controls, temperature controls, and electrical generating capacity of the building itself. The telephone lines will work even during power failures. The building also has a generator for emergency power. The main computer room housing the servers on the third floor is protected by an array of optimal controls such as halon fire prevention, humidity controls, large air conditioners, and temperature controls.

[Also include any concerns about chosen alternative sites, for example]:

> The rest of the building, however, is highly vulnerable to damage from fire and rapid changes in temperature and humidity. The building has no sprinkler system and the placement of thermostats does not match the current office configuration, resulting in wide variations of temperature depending on location.

F. Vital Records and Retention File

Vital records are archived and/or retained on backup data systems stored [identify offsite location and any important details, as appropriate]. Vital records are electronic and hard copy documents that are needed to support the essential functions and operations of a school, including legal and financial records, such as personnel and student records; payroll records; insurance records; and contract documents.

G. Human Capital Management

School personnel responsible for essential functions should be cross-trained to ensure effective implementation of COOP procedures:

- ☐ All COOP designated personnel as well as senior staff will undergo annual training on executing COOP procedures. Training will be designed to inform each participant of his/her responsibilities (and those of others) during implementation

of COOP procedures. It is essential that all employees have a clear understanding of what they are supposed to do. Training should include specific protocols for identifying and assisting employees with disabilities.

- ☐ Designated COOP personnel will participate in exercises to test academic, physical, and business systems. Training will include testing the information technology (IT) systems and backup data including testing of offsite backup system data and IT operating systems.
- ☐ All school personnel need to be informed of when they are expected to be ready to go back to work and/or if they are being recalled to support school COOP efforts.

H. Reconstitution

In most instances of COOP implementation, reconstitution will be a reverse execution of those duties and procedures listed above, including:

- ☐ Inform staff that the threat or incident no longer exists, and provide instructions for the resumption of normal operations.
- ☐ Supervise an orderly return to the school building.
- ☐ Conduct an after-action review of COOP operations and effectiveness of plans and procedures.

DROP, COVER AND HOLD

I. PURPOSE

Drop, Cover and Hold procedures may be used when an incident occurs with little or no warning. This action is taken to protect students and staff from flying or falling debris resulting from explosions, structural failures, severe weather or an earthquake.

II. RESPONSIBILITIES

Designated staff members, including teachers and bus drivers, should participate in the development, implementation, and evaluation of this procedure.

III. PROCEDURES

A. Indoor Procedure

When indoors, students/staff should:

- ☐ Drop to the floor.
- ☐ Cover by getting under a sturdy table, desk, or other piece of furniture. If there is no suitable furniture nearby, cover their face and head with their arms.
- ☐ Hold on to the table or desk until directed to stop.
- ☐ When directed by the Principal/designee and/or when it is safe to do so, staff members will evacuate students to pre-assigned locations.

Note: Staff and students do not use the elevators to evacuate.

B. Outdoor Procedure

When outdoors, students/staff should:

- ☐ Move away from buildings, streetlights and utility wires.
- ☐ Drop to the ground.
- ☐ Cover their face and head with their arms.
- ☐ When directed by the Principal/designee and/or when it is safe to do so, staff members will evacuate students to pre-assigned locations.

C. Moving Vehicle Procedure

When in a moving vehicle, drivers/staff should:

- ☐ Stop as quickly as safety permits.
- ☐ Instruct all students/staff to stay in the vehicle.
- ☐ When it is safe to do so, proceed cautiously or evacuate the vehicle.

EVACUATION PROCEDURE

I. PURPOSE

Evacuation should take place if it is determined that it is safer outside than inside the building (fire, explosion, intruder, hazardous material spill) and staff, students and visitors can safely reach the evacuation location without danger (playground, football stadium, or off-site location in the community).

II. RESPONSIBILITIES

A. School Incident Commander/Principal

- ☐ Call or designate another to immediately call public safety (911) (police, fire and emergency responders) to give notice the school has been evacuated.
- ☐ Notify appropriate district staff that an evacuation of the school has occurred.
- ☐ Communicate the need to evacuate the building or a specific area of the building to the building staff and other occupants by activating the fire alarm or by a public address system or bullhorn. Make the following announcement:

  YOUR ATTENTION, PLEASE. WE NEED TO EVACUATE THE BUILDING. TEACHERS ARE TO TAKE THEIR STUDENTS TO THEIR DESIGNATED ASSEMBLY AREA. TEACHERS TAKE YOUR CLASS ROSTER AND TAKE A HEADCOUNT AT THE ASSEMBLY AREA.

- ☐ Determine evacuation routes based on location of the incident and type of emergency.
- ☐ Communicate changes in evacuation routes based on location and type of emergency.
- ☐ Designate staff with assigned radios and/or cell phones to assist in evacuation procedures.
- ☐ Monitor the situation and provide updates and additional instructions as needed.
- ☐ During inclement weather, consider requesting buses for sheltering students.
- ☐ Communicate when it is safe to re-enter the building or re-occupy a section of the school by bell system, radio transmission, public address system, designated staff, or bull horn.

B. Teachers/Staff

- ☐ Instruct students to exit the building using the designated emergency exit routes or as directed by the School Incident Commander/Principal. Emergency exit routes should be diagramed on the school floor plan drawing posted near the light switch inside each room.
- ☐ Use a secondary route if the primary route is blocked or hazardous. Exit routes and the location of the inside the building evacuation location will be selected and communicated by the School Incident Commander/Principal at the time of the emergency and the evacuation.
- ☐ Help those needing special assistance.

- ☐ Do not lock classroom doors when leaving, close door and turn off lights.
- ☐ Do not stop for student or staff belongings.
- ☐ Take class roster, phone lists, first-aid kit and other emergency supplies with you.
- ☐ Check the bathrooms, hallways and common areas for visitors, staff or students while exiting.
- ☐ Go to designated evacuation assembly area (minimum of 50 feet from building is required in fire evacuation and 300 feet from building for bomb threat, chemical spill inside building, or other directed evacuations).
- ☐ When outside the building or inside the building evacuation location, check for injuries.
- ☐ Account for all students. Immediately report any missing or injured students to the School Incident Commander/Principal.
- ☐ Wait for additional instructions.

C. Office Staff

- ☐ Take visitor log and student sign out sheet to evacuation assembly area.
- ☐ Gather headcount information from teachers and inform the School Incident Commander/Principal of any missing students or staff.

FAMILY REUNIFICATION

I. PURPOSE

The Family Reunification Protocol is used to ensure a safe and secure means of accounting for students and reuniting parents/guardians with their children whenever the school facility or grounds is rendered unsafe and a remote site is needed.

II. RESPONSIBILITIES

A. School Incident Commander/Principal

- ☐ After consulting with an emergency Incident Commander (police, fire or other emergency official), if applicable, determine the appropriate pre-designated relocation site(s).
- ☐ Follow pre-determined procedures for releasing students.
- ☐ Notify a contact person at the relocation site(s) to prepare for arrival of students.
- ☐ Designate a Reunification Site Commander.
- ☐ Request the District Office to send personnel to staff the reunification site(s).
- ☐ Follow pre-determined parental notification procedures such as phone trees, local media channels, automated alert system, cell or text messaging, etc.

B. Reunification Site Commander

- ☐ Establish a command post.
- ☐ Organize public safety and mental health/crisis response staff who will be reporting to the site. Use them to calm waiting parents/guardians and explain that an orderly process is required for the safety of the students.
- ☐ Check identification of all non-uniformed personnel who arrive to assist.
- ☐ Secure a holding area for arriving students and staff away from waiting family members.
- ☐ Set up an adult report area for parents/guardians to sign-in and to check identification.
- ☐ Set up a student release area where students will be escorted to meet their parent/guardian and sign out.
- ☐ Set up a mental health area and direct staff to escort parent/guardian of any injured, missing or deceased student to the area for staff to provide notification in private away from other parents.
- ☐ Set up a media staging area and notify the school media liaison of the location.
- ☐ Keep evacuees on buses or in a holding area separate from parents until they can be signed out to waiting parents/guardians.
- ☐ Only release students to authorized persons after checking proof of identity and signing a student release form.
- ☐ Instruct parents/guardians to leave the site to make room for others once they have signed out their student.

C. Teachers

- ☐ Provide a list of evacuated students to the reunification site staff upon arrival.
- ☐ Ensure special needs students and staff are assisted. Request help if needed.
- ☐ Follow the instructions of the Reunification Site Commander or designated staff and/or assist in staffing the site.

III. OTHER PROCEDURES

- ☐ Outline procedures for releasing students.
- ☐ Maintain current student and staff emergency information that details special needs, such as medical or custody issues.
- ☐ Store information in a secure and readily accessible location.
- ☐ Outline parental notification methods.

LOCKDOWN PROCEDURE

I. PURPOSE

Lockdown is the initial physical response to provide a time barrier during an active shooter/intruder event. Lockdown is not a stand-alone defensive strategy. When securing in place, this procedure should involve barricading the door and readying a plan of evacuation or counter tactics should the need arise.

II. RESPONSIBILITIES

A. School Incident Commander/Principal

☐ Make the following announcement using the building Public Address system, 2-way radio, telephone, or megaphone:

> YOUR ATTENTION PLEASE. WE ARE EXPERIENCING AN EMERGENCY SITUATION AND WE ARE NOW UNDER LOCKDOWN.

☐ Designate staff to call 9-1-1, identify the name and address of the school, describe the emergency, state the school is locking down, provide intruder description and weapon(s) if known, and identify the location of the school command post. Direct staff to stay on the phone to provide updates and additional information.
☐ Notify staff and classes outside to immediately move to the off-site assembly area(s), account for the students and be prepared to move to a relocation site.
☐ Notify the transportation director or contractual bus service to stop all inbound buses and redirect them to designated relocation site(s).
☐ Notify district office.

B. Teachers

☐ Clear the hallway and bathrooms by your room, moving everyone into the classroom.
☐ Lock your doors.
☐ Move any large objects in front of the door to barricade door. All moveable items such as chairs should be used as well.
☐ Take attendance and be prepared to notify Incident Commander of missing students or additional students, staff or guests sheltered in your classroom.
☐ Do not place students in one location within the room. In the event that entry is gained by a shooter or intruder, students should consider exiting by running past the shooter/intruder.
☐ Staff and students may utilize methods to distract the shooter/intruder's ability to accurately shoot or cause harm, such as loud noises or aiming and throwing objects at the shooter/intruder's face or person.

- ☐ Allow no one outside of the classroom until the Incident Commander gives the "All Clear" signal unless a life-threatening situation exists and a means to safe exit is available (through a window or other safe passage).

C. Office Staff

- ☐ Stay by the phones to wait for additional procedures from district office and Incident Commander.
- ☐ Remotely check status of classrooms via PA, telephone, computer, or other method.
- ☐ Assist the principal or Incident Commander to establish the school command post.

D. Custodians

- ☐ Close and lock all delivery doors.
- ☐ Direct any contractors, delivery drivers, vendors or repairmen located inside the building into a safe area and lock the door.

If students and school personnel are outside of the school building at the time of a LOCKDOWN, teachers or other school personnel will move students to the designated off-site assembly location.

MENTAL HEALTH AND HEALING

I. PURPOSE

Mental health and healing procedures are developed to provide an emotional catharsis to students and staff impacted by trauma at school or in the community. Following a traumatic event or incident, students, staff, and their families need a healing process. As soon as the safety of all involved has been addressed, attention should be turned to the healing process.

Mental health professionals available in the school community such as nurses and social workers should participate in the development, implementation, and evaluation of the School EOP as it relates to this annex. Additional advice may be sought from outside psychologists and mental health experts.

II. RESPONSIBILITIES

A. Principal or District Authority Should Implement the Following Actions.

- ☐ Staff will be trained to learn how to recognize signs of physical and/or mental stress due to trauma.
- ☐ Members of a crisis response team will undergo in-depth training to learn how to assist in managing stress due to trauma.
- ☐ Parents and guardians will be offered tips on how to recognize signs of physical or mental stress due to trauma.
- ☐ Mental health experts will review and provide input into the plan.
- ☐ Ensure that a media or public information officer is available and trained to prepare announcements and media releases on the incident and actions taken.

Principal or designated staff should do the following immediately following a serious Injury or death and/or major incident:

- ☐ Make an initial announcement to the entire school and include minimum details and indicate that additional information will be provided.
- ☐ Issue prepared statements for media, parents and other community inquiries.
- ☐ Convene a staff meeting to discuss how the situation is being handled and what resources are available to staff, students, and families.
- ☐ Set up crisis centers and designate private rooms for private counseling and include outside mental health professionals and clergy to assist with grief.
- ☐ Provide guidelines to and encourage teachers to facilitate class discussions about the incident and allow students to openly discuss feelings, fears and concerns shortly after the incident. Any students who are excessively distraught should be referred to the crisis response team for counseling.
- ☐ Restore regular school functions as efficiently and as quickly as possible.
- ☐ Accept donations. In the first hours and days after a major incident, offers of help will probably be plentiful; however, offers will diminish considerably as time passes. Donations given and not used can always be returned.

- ☐ Designate a place for staff, students, and community members to leave well-wishes, messages, and items.

B. Teacher and Staff

- ☐ Seek counseling services if experiencing difficulty coping with the incident.
- ☐ Provide stress management during class by allowing students to talk about what they experienced and felt during the incident and how they feel now.
- ☐ Be prepared for outbursts and disruptive behaviors.
- ☐ Refer students experiencing stress to counseling.
- ☐ Allow for changes in normal routine activities and test schedules.

III. OTHER SPECIAL PROCEDURES

A. Hospital/Funeral Arrangements

- ☐ Provide staff with information regarding visitation and/or funeral arrangements (time, location, customs) when available. If the funeral is scheduled during a school day, all students and staff should be excused from school.
- ☐ Encourage staff and students to attend the funeral to provide support for the family and bring closure to the incident.
- ☐ Designate staff person(s) to visit the hospital and/or attend the funeral to represent the school.

B. Post-Incident Procedures

- ☐ Allow for changes in normal routines or schedules to address injury or death; however, recommend students and staff return to their normal routine as soon as possible after the incident.
- ☐ Follow up with students and staff who receive counseling and refer them to outside mental health professionals as needed.
- ☐ Discuss and approve memorials with the school board's consent.
- ☐ Donate all remaining memorial items to charity.

REVERSE EVACUATION PROCEDURE

I. PURPOSE

Reverse evacuation should occur when conditions are safer inside the building than outside, generally when conditions involve severe weather, community emergencies, gang activity, or a hazardous material release outside of the school building.

II. RESPONSIBILITIES

A. School Incident Commander/Principal

- ☐ Order a REVERSE EVACUATION for students and staff outside to move inside the building. Use the building public address system, megaphone, 2-way radio, telephones or runners to gather students and staff inside.
- ☐ Notify the district office of the situation.
- ☐ Notify public safety by calling 911: police, fire and emergency services responders, as appropriate.
- ☐ Designate staff to monitor radio, Internet, and other media for information on incident conditions.
- ☐ Close and lock all exterior doors and windows.
- ☐ Maintain contact with public safety officials and consult on whether additional procedures should be activated due to changing conditions of the incident, such as DROP, COVER, AND HOLD or SHELTER-IN-PLACE.

B. Teachers/Staff

- ☐ Immediately move students back to classrooms or safe areas using the closest entry.
- ☐ No students or staff should be outside the building.
- ☐ Close and lock all exterior doors and windows.
- ☐ If movement into the building would present a danger, teachers and staff outside will direct students to designated assembly areas or off-site assembly areas.
- ☐ Teachers will take attendance and account for all students and report any missing students to the School Incident Commander/Principal.
- ☐ Wait for further instructions from the School Incident Commander/Principal or from a public safety official.
- ☐ Monitor the main entries until the “All Clear” is given.

SHELTER-IN-PLACE

I. PURPOSE

The shelter-in-place procedure provides a refuge for students, staff and the public inside the school building during an emergency. Shelters are located in areas of the building that maximize the safety of occupants. Shelter-in-place is used when evacuation would place people at risk. Shelters may change depending on the emergency.

II. RESPONSIBILITIES

A. School Incident Commander/Principal

☐ Make the following announcement using the building public address system, 2-way radio, telephone, or megaphone:

> YOUR ATTENTION, PLEASE. WE ARE EXPERIENCING AN EMERGENCY SITUATION AND NEED TO IMPLEMENT SHELTER-IN-PLACE PROCEDURES. STUDENTS AND STAFF ARE DIRECTED TO MOVE TO THE DESIGNATED SHELTER LOCATIONS AND SAFE AREAS. ALL STAFF AND STUDENTS OUTSIDE ARE TO IMMEDIATELY MOVE TO AN INSIDE ROOM.

☐ Order a REVERSE EVACUATION for students and staff outside to move inside the building. Use the building public address system, megaphone, 2-way radio, telephones or runners to gather staff and students inside.
☐ Direct staff to close all windows and doors.
☐ If warranted, order the shut-off of heating, ventilation and air conditioning systems to stop the inflow of outside air into the building.
☐ Notify district office the school is SHELTERING-IN-PLACE.
☐ Designate staff to monitor radio, Internet, and other media for information on incident conditions that caused the SHELTER-IN-PLACE.
☐ Contact and consult with public safety officials as appropriate.
☐ Be prepared to announce additional procedures due to changing conditions of the incident, such as DROP COVER AND HOLD or to announce an “All Clear”.

B. Teachers

☐ Move students into designated safe areas such as inside rooms with no windows, bathrooms, utility closets or hallways without large windows or doors.
☐ Close classroom doors and windows when leaving.
☐ Have everyone kneel down and be ready to cover their heads to protect from debris, if appropriate.
☐ If outside, teachers will direct students into the nearest school building interior safe area or other appropriate shelter.
☐ For severe weather, if there is no time to get into a building or shelter, attempt to squat or lie low in the nearest ravine, open ditch or low spot away from trees and power poles.

- ☐ If movement into the building would expose persons to a hazardous chemical plume, teachers should move to designated outdoor assembly areas upwind or cross-wind from the spill.
- ☐ Move students from mobile classrooms to an interior safe area in a permanent structure.
- ☐ All persons must remain in the shelter until notified by the School Incident Commander/Principal or public safety official that it is safe to exit.

C. Custodians

- ☐ Shut off utilities as directed by School Incident Commander/Principal or public safety official
- ☐ Turn off ventilation systems (heating, ventilation and air conditioning) as directed and if appropriate.
- ☐ Post Shelter-in-Place cards at the primary entrances to the building(s), if appropriate and safe to do so, depending on the type of incident that is occurring. For example, such cards should not be used with an ACTIVE SHOOTER, INTRUDER or during an incident involving a person intent on violence known to be in the school building and not yet contained.

HAZARD-AND-THREAT SPECIFIC ANNEXES

The hazard-and-threat specific annexes provide unique procedures, roles and responsibilities that apply to a specific hazard. They often include provisions and applications for warning the public and disseminating emergency public information.

Hazard- and threat-specific annexes do not repeat content but build on information in the functional annexes and basic plan. Repeating information is not advisable for the following reasons:

- ☐ School staff and students should learn and exercise simple procedures that apply to all hazards.
- ☐ The hazard-specific annexes should present only hazard-unique information.
- ☐ Repeating procedures increases the possibility that there will be inconsistencies in procedures that could lead to confusion during an incident.
- ☐ The plan becomes larger and more difficult for users to comprehend.

Schools should customize hazard-and-threat specific protocols to fit their unique circumstances. Planning, training, drills and table-top exercises conducted with local emergency and safety officials will assist in development of effective procedures and protocols. These activities will also help a school evaluate the appropriateness of the procedures in the plan, and assist with modifications or updating as necessary to ensure that the procedures are sufficient to provide a safe environment for students, staff and visitors.

ACTIVE SHOOTER

I. PURPOSE

An active shooter or armed assailant on school property involves one or more individual's intent on causing physical harm and/or death to students and staff. Such intruders may also possess a gun, a knife, a bomb or other harmful device. An Active Shooter will result in law enforcement and other safety and emergency services responding to the scene.

Once law enforcement arrives, it is critical to follow the instructions of, and cooperate with, the law enforcement officer who will be the Incident Commander with jurisdiction over the scene. The school is a crime scene and will require a thorough search and processing.

II. RESPONSIBILITIES

A. School Incident Commander/Principal

- ☐ Direct staff to call 9-1-1 [Insert the actual sequence to dial 911 from your phone system], give the name and exact location of the school, the nature of the emergency, number and description of intruders (if known), type of weapon(s), area of the school where last seen, actions taken by the school, and whether there are on-site security or law enforcement officers (e.g. DARE, School Resource Officer). Caller will remain on the line to provide updates.
- ☐ Secure the administration office as a command post and retrieve the critical information and data about the school's emergency systems, including communications, staff and students locations, detailed floor plans and other important information, documents, items, and supplies that are prepared and readily available for use during the incident. If the incident is occurring at the administration office, designate an alternate command post.
- ☐ Direct office staff to maintain contact with teachers reporting pertinent emergency information via [identify means- phone, email, texting – used by school].
- ☐ Notify the Superintendent's office and request activation of the communications plan for media and parent notification protocols.
- ☐ Refer media to:

_____

District Spokesperson Telephone Numbers (home, work, mobile)

- ☐ Determine appropriate procedure(s): LOCKDOWN; INTRUDER/HOSTAGE SITUATION; SHELTER-IN-PLACE).
- ☐ Direct staff and students outside the building to move immediately to predetermined assembly area(s) and be prepared to EVACUATE to an off-site relocation center.
- ☐ Direct support staff outside to stop pedestrians and vehicles from entering the school grounds until law enforcement arrives.
- ☐ Ensure that any buses en route to the school are redirected to a designated relocation site.

B. Teachers and Staff

- ☐ Initiate LOCKDOWN procedure if instructed by School Incident Commander/ Principal or law enforcement Incident Commander.
- ☐ If you are the first to note indication of an armed intruder, immediately CALL 911, then notify the School Incident Commander/Principal and go to LOCKDOWN.
- ☐ Gather information about your classroom's immediate situation. Account for all students or other individuals sheltered in your room.
- ☐ Assess your ability to EVACUATE the building.
- ☐ If there is no safe manner to EVACUATE the building, have students remain in LOCKDOWN until personally given the "All Clear" by the Incident Commander or a law enforcement officer in uniform.
- ☐ If an active shooter or intruder enters the classroom use WHATEVER means necessary to keep your students safe. This may include any and all forms of resistance to the threat.
- ☐ If an intruder enters and begins shooting, any and all actions to stop the shooter are justified. This includes moving about the room to lessen accuracy, throwing items (books, computers, phones, book bags) to create confusion, exiting out windows, and confronting (assault, subdue, choke) to stop the intruder. Tell students to get out anyway possible and move to another location.

III. OTHER PROCEDURES

- ☐ After the active shooter/intruder(s) has been subdued, the School Incident Commander/ Principal in consultation with the law enforcement Incident Commander will announce an EVACUATION and relocation to an alternate site for FAMILY REUNIFICATION.
- ☐ If staff or students are injured, emergency medical personnel will take control of the scene and direct services as appropriate.
- ☐ The School Incident Commander will notify officials at the relocation site of the EVACUATION and to activate FAMILY REUNIFICATION protocols.
- ☐ The School Incident Commander will request bus transportation or alternate transportation to the relocation site.
- ☐ The School Incident Commander will activate the communications plan to deal with media and parent notification protocols, and direct parents to go to the relocation site.
- ☐ Teachers will EVACUATE the building using the designated exit routes and alternate routes to the assigned assembly areas, take attendance and move to the buses for transport.
- ☐ The School Incident Commander will activate the crisis response team and active MENTAL HEALTH AND HEALING procedures and/or notify area mental health agencies to provide counseling and mental health services at the relocation site.
- ☐ The School Incident Commander will debrief appropriate school personnel.

- ☐ The Superintendent or designee, in consultation with law enforcement officials, will determine when the school can resume normal activities and communicate the information to parents and the public.

BOMB THREAT

I. PURPOSE

The purpose of this annex is to ensure that there are procedures in place to protect staff, students and school property in the event of a communicated threat regarding the presence of destructive devises on school property. This may include any explosive devise of an incendiary, chemical, biological, or radioactive nature. A bomb threat will result in law enforcement and other safety and emergency services responding to the scene.

Once law enforcement arrives, it is critical to follow the instructions of, and cooperate with, the law enforcement officer who will be the Incident Commander with jurisdiction over the scene. The school is a crime scene and will require a thorough search and processing.

II. RESPONSIBILITIES

A. Staff Who Received a Message That a Bomb Has Been Placed in School

- ☐ Make a record of the exact wording of the threat.
- ☐ Ask in a clear and calm voice: Where the bomb is located; What does it look like; What materials are in the bomb (type of bomb); How is it activated; When will the bomb explode; Who is calling, name and address; Did you place the bomb; Why are you doing this.
- ☐ If the threat is made by phone, listen closely to caller's voice and speech patterns and to noises in background. Make a record of that information.
- ☐ If the threat is made by phone and the caller hangs up, immediately dial *57 [or the appropriate number] to trace the call.
- ☐ Notify the Incident Commander/Principal or designee and/or call 911.

B. School Incident Commander/Principal

- ☐ Notify law enforcement, fire and emergency services by calling 911 [insert the actual sequence to dial 911 from your phone system] if not already notified.
- ☐ Assign staff to meet and brief emergency responder agencies.
- ☐ Notify staff through the Public Address system:

  YOUR ATTENTION PLEASE. A BUILDING EMERGENCY IS IN EFFECT. ALL STAFF AND STUDENTS SHOULD REMAIN IN THEIR ROOMS UNTIL ADVISED OTHERWISE. TWO-WAY RADIOS AND CELL PHONES SHOULD BE TURNED OFF.

- ☐ If a suspicious item is located, determine if EVACUATION procedures should be activated, selecting routes and assembly areas away from the suspicious item. DO NOT ACTIVATE THE FIRE ALARM. Or, determine if further response should await arrival of law enforcement and other emergency services. See subsection D below.

- ☐ If EVACUATION occurs, students and staff must be evacuated to a safe distance outside of school building(s) MINIMUM 1000 Feet is the general rule. [Consult with Fire and Police officials.]
- ☐ Arrange for person who found a suspicious item to talk with law enforcement official.
- ☐ Notify the Superintendent.
- ☐ Active communications plan to inform parents, media, and community of incident as determined in consultation with law enforcement.

C. Teachers and staff

- ☐ Check classrooms, offices and work area for suspicious items and report any findings to the School Incident Commander/Principal.
- ☐ If a suspicious item is found-DO NOT TOUCH IT. Secure the area where the item is located.
- ☐ Account for students and be prepared to EVACUATE if ordered.
- ☐ EVACUATE using standard procedures and exit routes to assembly area.
- ☐ Open classroom windows and leave classroom doors open when exiting.
- ☐ Take roll after being EVACUATED. Be prepared to report the names of any missing persons to school administration.
- ☐ Keep students together at the assembly area until given further instructions. Be prepared to go to off-site relocation if ordered.
- ☐ If given the "All Clear" signal, return to the building and resume normal operations.

D. Incident Commander/Law Enforcement, Fire & Emergency Agencies

Once emergency responders are on scene, decisions must be made to:

- ☐ EVACUATE immediately, if this has not already occurred and if warranted, selecting routes and assembly areas away from the suspicious item. DO NOT ACTIVATE THE FIRE ALARM.
- ☐ Speak to staff who received the threat and obtain information.
- ☐ Search the building.
- ☐ If a search is to be conducted, assemble and brief a search team at the interior command post. Assign search areas within the building, the emergency exit routes and the outside assembly areas.
- ☐ If a suspicious item is located, order an EVACUATION, if that has not already occurred.
- ☐ No one may re-enter the building(s) until fire or police personnel declare it is safe to do so.
- ☐ After consulting with the Superintendent and School Incident Commander / Principal determine if staff and students should be relocated to an alternative safe site.
- ☐ If danger is over, notify staff and students of the termination of the emergency and to resume normal operations.

BUS ACCIDENT

I. PURPOSE

School bus accidents may occur both within the geographic boundaries of the district or outside the district (field trips, interscholastic activities). While data continue to show that school buses are the single safest mode of travel between home and school, accidents can occur. The dynamics of traffic, exposure to weather conditions and limited adult supervision requires that drivers be well trained. Each bus should include a first-aid kit, fire extinguisher, flashlight and batteries, emergency warning devices (road flares and reflective devises, such as triangles and vests). The purposes of these procedures are to:

- ☐ Provide a standardized approach in the management of school bus accidents.
- ☐ Provide emergency care, as appropriate for the incident, while making the most efficient use of available resources.

II. RESPONSIBILITIES

A. Bus Driver

- ☐ Call bus garage or appropriate school personnel by [radio or other established means per policy] and 911 emergency services (police, fire, ambulance), as required. Give exact location of accident, along with information about severity, injuries, and hazards, and resources needed.
- ☐ Set parking brake, turn off ignition switch, and activate hazard lights.
- ☐ Remain calm and reassure students and/or other passengers.
- ☐ Be alert to the potential for, and check conditions that could cause a fire or other hazardous situation.
- ☐ Use or deploy warning devices as appropriate.
- ☐ Determine if evacuation of the bus is warranted. All passengers should remain in the bus unless fire or other hazardous condition exists requiring evacuation and/or relocation to safer location. It is extremely important that injured persons are not moved unless a hazard exists that presents an imminent danger of further injury.
- ☐ Provide first-aid as needed.
- ☐ Regularly update school or emergency personnel on situation and conditions.
- ☐ If students/passengers are transferred to another location (hospital, shelters, another bus) record and report information, including who was transported and location, to bus garage or appropriate school personnel.
- ☐ Protect the passengers and vehicle from further accident and injuries.
- ☐ Protect the scene from traffic and people so that evidence is not destroyed. Under normal circumstances, the vehicle(s) involved should not be moved until law enforcement personnel advise the driver to do so.
- ☐ Cooperate with directions of emergency responders.
- ☐ Complete an incident report after incident is resolved.

B. Principal/ School Incident Commander

- ☐ Dispatch appropriate transportation or other staff to the accident location.
- ☐ Assess level of support or resources needed and make it available.
- ☐ Obtain names of students/passengers, conditions, locations if removed from the site and report to district or other designated staff for instituting parental notifications and information sharing with media or other, as appropriate
- ☐ Ensure that special health or medical information is provided to appropriate medical providers.
- ☐ Instruct designated staff to accompany injured students to hospital, if needed.
- ☐ Determine if FAMILY REUNIFICATION procedures should be activated.
- ☐ Determine if MENTAL HEALTH AND HEALING procedures are needed.

III. OTHER PROCEDURES OF GENERAL OPERATIONS

A. Emergency services agencies (police, fire, EMS), if called, will take charge of the accident scene upon their arrival. A school representative (the superintendent, principal or designated person with decision-making authority) will be dispatched to the accident scene (distance and time permitting)

B. Communication with parents and child care providers is critical since a late school bus always arouses some anxiety. The Incident Commander in charge of the incident will decide when the school can begin individual parental notification.

C. All injured and potentially injured persons (as determined by EMS personnel) will be transported to area hospitals. The number of ambulances utilized and hospital destinations will be determined by the on-scene emergency services personnel. The following guide can be utilized to determine mode of transport:

Triage	Priority	Mode of Transport
Red	Immediate	Ambulance/Helicopter
Yellow	Delayed	Ambulance
Green	Walking Wounded	Bus or other
Black	Deceased	Coroner

NOTE: The responsibility for the determination of injuries and potential injuries for any person involved in the accident rests with the highest appropriately trained on-scene EMS personnel.

D. If it has been determined by emergency response authorities at the scene that the accident is minor in nature (little or no damage to school bus, estimated forces involved suggest no mechanism for injury, no complaints, or signs of injury), every effort will be made to avoid unnecessary transport of the

children to area hospitals. In that event, the school representative at the scene will have the option having custody and control of the children (under 18 years of age), to sign a release form declining hospital transport. The form utilized will list the names of all children that have been evaluated by EMS personnel, have been found to lack mechanism of injury, signs of injury, AND have no complaints of injury. The School will provide, for inclusion with this procedure, a list of individuals that have been granted the authority to act as the School's designee at the accident scene. No bus drivers are to be included on the list. In the event that a list has not been provided, the Incident Commander may verify the authority of any representative by contacting the appropriate school/district office. Anyone claiming to be the School designee but whose name is not included on the list, or whose authority cannot be verified, will not be permitted to sign the refusal. Any child not listed on the release form will be transported to a hospital for further evaluation.

E. In the event that the School representative signs the release form for all passengers on the bus at the time of the accident, a driver and school bus not involved in the accident will be dispatched to the scene to continue the student transportation.

F. In the event that the School representative is, for any reason, unable to sign the release form or if there is greater potential for mechanism of injury, all passengers will be transported to the closest appropriate hospital(s) for further evaluation. Anyone not requiring an ambulance will be transported in the following manner:

- ☐ A driver and school bus, which was not involved in the accident, will be dispatched to the scene on the request of the Incident Commander and School.
- ☐ EMS personnel, with at least one or more EMTs, will be placed on the bus with the passengers and an ambulance will follow the bus to the hospital.
- ☐ In the event that a passenger's condition suddenly deteriorates, the bus will be stopped, the passenger will receive emergency care and will be placed in the ambulance for further care and transport to the hospital. The bus will then continue to the hospital with the remainder of the passengers.
- ☐ Additional ambulance(s) may be assigned to the bus based on need and available resources.

CHEMICAL OR HAZARDOUS MATERIALS SPILL

I. PURPOSE

Hazardous chemicals are used for a variety of purposes and are regularly transported through many areas in and around a school. Chemical accidents may originate inside or outside the building. Examples include: toxic leaks or spills caused by tank, truck or railroad accident; water treatment/waste treatment plants; and industry or laboratory spills. The purpose of this annex is to ensure that there are procedures in place to protect staff/students and school property in case of a chemical or hazardous materials spill.

II. SPECIFIC SCHOOL INFORMATION

Currently, [list chemical used on the premises] are all used and stored on school grounds as follows: [provide locations and specific information as relevant]. The school's maintenance team, custodian or designated staff inspects stored chemicals twice a month. The school siren acts as a warning system to notify staff/faculty and students of a hazardous condition. Decontamination equipment and personal protective equipment are located in a storage unit next to [insert location of the equipment].

[School name] is aware of the following conditions in the surrounding community that could subject the school to a chemical or hazardous materials spill [list the conditions from the hazards assessment in the basic plan].

The School Incident Commander/Principal will determine if and when the following operational functions or procedures may be activated in the event of an **external** chemical or hazardous spill:

- ☐ Continuity of Operations (COOP).
- ☐ Evacuation.
- ☐ Family Reunification.
- ☐ Medical Emergency.
- ☐ Mental Health and Healing.
- ☐ Reverse Evacuation.
- ☐ Shelter-in-Place.

Or, if there is an **internal** chemical spill, whether the following procedures may be activated:

- ☐ Evacuation.
- ☐ Family Reunification.
- ☐ Medical Emergency.
- ☐ Mental Health and Healing.

II. RESPONSIBILITIES

A. Procedures for an External Chemical or Hazardous Spill

The Principal will determine the need to activate the School EOP and designate a School Incident Commander until a qualified HazMat or other emergency Incident Commander arrives at the scene with jurisdiction over the incident. Once an emergency Incident Commander arrives, it is critical to follow the instructions of, and cooperate with, that Incident Commander.

If the chemical spill is **external**, the following steps will be taken by the school.

1. School Incident Commander/Principal

- ☐ Call 911 and notify local law enforcement and emergency responders.
- ☐ Determine what procedures should be activated, such as a REVERSE EVACUATION and SHELTER–IN–PLACE.
- ☐ Notify maintenance/building, custodial, and grounds staff to shut off mechanical ventilating systems, if appropriate.
- ☐ Take appropriate action to safeguard school property.
- ☐ Notify appropriate school personnel (Superintendent/Policy Group) of the status and actions taken and keep them updated of any significant changes.
- ☐ Activate internal and external communications plan.
- ☐ Monitor radio, television, Internet, and/or other means of information and report any developments to the Incident Commander.
- ☐ If it is determined that conditions warrant an EVACUATION, issue instructions for relocating to a safer location by means of walking, buses and cars.
- ☐ Notify relocation centers and determine an alternate relocation center if necessary.
- ☐ Disseminate information about the incident and follow-up actions such as where students/school has relocated and institute FAMILIY REUNIFICATION procedures, if needed.
- ☐ Do not allow staff and students to return to the building until proper authorities have determined that it is safe to do so and given the “All Clear” signal after the threat has passed.
- ☐ Determine whether school will be closed or remain open.
- ☐ Implement additional procedures as instructed by the School and/or emergency Incident Commander.
- ☐ Document all actions taken.

2. Teachers and Staff

- ☐ Move students away from immediate vicinity of danger.
- ☐ Implement REVERSE EVACUATION if students are outside; observe wind direction by observing flags or leaves and move students appropriately.
- ☐ Execute SHELTER-IN-PLACE when instructed by the Incident Commander.
- ☐ Remain with students throughout the incident.
- ☐ Report any missing or injured students to the Incident Commander.

- ☐ Remain in safe area until the "All Clear" signal has been issued.
- ☐ In the event of building damage, evacuate students to safer areas of the building or from the building. If evacuation does occur, do not re-enter the building until an "All Clear" signal is issued.
- ☐ Document all actions taken.

B. Procedures for an Internal Chemical or Hazardous Spill

The Principal will determine the need to activate the School EOP and designate a School Incident Commander until a qualified HazMat or other emergency Incident Commander arrives at the scene with jurisdiction over the incident. Once an emergency Incident Commander arrives, it is critical to follow the instructions of, and cooperate with, that Incident Commander.

If the chemical spill is **internal**, the following steps will be taken by the school.

1. Person Discovering the Spill

- ☐ Alert others in immediate area and leave the area.
- ☐ Close windows and doors and restrict access to affected area.
- ☐ Notify Principal/teacher/safety officer or call 911, if appropriate.
- ☐ Do not attempt to clean the spill.
- ☐ Seek first-aid if contact with spill occurs.

2. Incident Commander Actions

- ☐ Notify the local fire department and local/state departments of public health. Provide the following information:
  - ☐ School name and address, including nearest cross street(s).
  - ☐ Location of the spill and/or materials released; name of substance, if known.
  - ☐ Characteristics of spill (color, smell, visible gases).
  - ☐ Injuries, if any.
- ☐ Determine what procedures should be activated, such as EVACUATION.
- ☐ Notify local law enforcement of intent to evacuate.
- ☐ Avoid exposure to the chemicals or hazardous fumes or materials in any EVACUATION.
- ☐ Notify maintenance/building/custodial and grounds staff to shut off mechanical ventilating systems, as appropriate.
- ☐ Notify the Principal, Superintendent/Policy Group of the status and actions taken, and keep them updated of any significant changes.
- ☐ Activate internal and external communications plan.
- ☐ Issue instruction if students will be evacuated to a safer location by means of walking, buses and cars.
- ☐ Do not allow staff and students to return to the building until proper authorities have determined that it is safe to do so and given the "All Clear" signal the threat has passed.

- ☐ Address clean up needs and actions with appropriate fire, safety and/or emergency services personnel.
- ☐ Determine whether school will be closed or remain open.
- ☐ Document all actions taken.

3. Teachers and Staff

- ☐ Move staff and students away from the immediate danger zone and keep staff and students from entering or congregating in danger zone.
- ☐ Report location and type (if known) of the hazardous material to Incident Commander.
- ☐ Execute EVACUATION and relocation procedures when instructed by the Incident Commander unless there is a natural or propane gas leak or odor. If a natural or propane gas leak or odor is detected, evacuate immediately and notify the Principal/Incident Commander.
- ☐ Take class roster, first-aid kit and any other supplies or resources relevant to the incident.
- ☐ Check that all students have left the building. Students are not to be left unattended at any time during EVACUATION.
- ☐ Upon arrival at evacuation site take attendance. Notify Incident Commander or designee of any missing or injured students.
- ☐ Remain with students throughout the incident.
- ☐ Do not return to the building until emergency response personnel have determined it is safe and issued an “All Clear” signal.
- ☐ Document all actions taken.

EXPLOSION

I. PURPOSE

An explosion can be the result of boiler explosion, gas leak, chemical or hazardous spill or some other man-made (bomb) or natural hazard. An explosion may require the activation of a several procedures, including:

- ☐ Continuity of Operations (COOP).
- ☐ Evacuation.
- ☐ Family Reunification.
- ☐ Medical Emergency.
- ☐ Mental Health and Healing.

Any staff, student or visitor discovering an explosion will activate the fire alarm, report the explosion to the Principal, and call 911 for emergency services if injuries are apparent. Once an emergency Incident Commander arrives (police and/or fire), it is critical to follow the instructions of, and cooperate with, the Incident Commander who has jurisdiction at the scene.

No one may re-enter building(s) until it is declared safe by the fire department.

II. RESPONSIBILITIES

A. Incident Commander/Principal

- ☐ Call 911 [insert the actual sequence to dial 9-1-1 from your phone system] to confirm the alarm, identify the school name and location, provide exact location of the explosion, if any staff or students are injured and inform emergency services (police and fire) the building is being evacuated and identify the location of the school command post.
- ☐ Activate an EVACUATION.
- ☐ Ensure that staff, students and visitors immediately evacuate the building using prescribed routes or alternate routes due to building debris to the assembly areas. Assembly areas may need to be relocated because of the building collapse or unsafe areas from the explosion or continued explosions.
- ☐ Notify the district office and institute communications plan.
- ☐ Designate staff to take the visitor log, student sign-out sheet and the critical incident response documents, information, items, supplies to the designated school command post.
- ☐ Designate staff to obtain student roll from teachers and identify any missing students.
- ☐ If safe and appropriate to do so, direct designated staff to shut off utilities.
- ☐ Notify and provide regular updates to staff and students of the status of the emergency.

- ☐ Upon consultation with Superintendent, fire department and law enforcement officials, and if necessary due to unsafe conditions direct an off-site evacuation to a designated primary relocation center.
- ☐ If relocation occurs, activate FAMILY REUNIFICATION.
- ☐ If relocation is not necessary, provide information on plan to return to the building and resumption of normal operations.
- ☐ Do not allow staff and students to return to the building until proper authorities have determined that it is safe to do so and given the "All Clear" signal after the threat has passed.

B. Teachers

- ☐ Take the class roster and first-aid kit and any other supplies or resources relevant to the incident and lead students as quickly and quietly as possible out of the building to the designated assembly area(s).
- ☐ Use alternate escape routes if the regular route is blocked or there is a safety hazard.
- ☐ Assist or designate others to assist students with functional needs.
- ☐ Close the classroom door and turn out the lights upon exiting and confirm all students and personnel are out of the classroom.
- ☐ Take attendance at the assembly area. Report any missing students or staff members and/or any injuries to the Principal and/or emergency Incident Commander at the scene.
- ☐ Keep class together and wait for further instructions.
- ☐ Remain in safe area until the "All Clear" signal has been issued.
- ☐ Be prepared to move students if an off-site relocation is ordered.
- ☐ Be prepared to move the students if the situation warrants it.
- ☐ No one may re-enter building(s) until it is declared safe by the fire department.

FIRE

I. PURPOSE

[School name] has a policy and procedures governing fire drills and conducts fire drills as required by law. All staff are trained on how to respond in the event of a fire.

- ☐ Any staff discovering fire or smoke will activate the fire alarm, and report the fire to the Principal, or call 911 if conditions require and/or injured are in need of medical assistance.
- ☐ Staff, students and visitors will immediately evacuate the building using prescribed routes or alternate routes to the assembly areas.
- ☐ No one may re-enter building(s) until it is declared safe by the fire department.

Once an emergency Incident Commander arrives (fire department), it is critical to follow the instructions of, and cooperate with, the Incident Commander who has jurisdiction at the scene.

II. RESPONSIBILITIES

A. Incident Commander/Principal

- ☐ Call or direct staff to call 911 [insert the actual sequence to dial 9-1-1 from your phone system] to confirm the alarm is active, identify the school name and location, provide exact location of the fire or smoke, if any staff or students are injured, state the building is being evacuated and identify the location of the school command post.
- ☐ Activate an EVACUATION.
- ☐ Ensure that staff, students and visitors immediately evacuate the building using prescribed routes or alternate routes due to building debris to the assembly areas. Assembly areas may need to be relocated because of the building collapse or unsafe areas from the fire.
- ☐ Notify the district office and institute communications plan.
- ☐ Direct office staff to take the visitor log, student sign-out sheet and the critical incident response documents, floor plans, information, items, supplies to the designated school command post.
- ☐ Designate staff to obtain student roll from teachers and identify any missing students.
- ☐ Upon consultation with Superintendent, fire department and law enforcement officials, and if necessary due to unsafe conditions, direct an off-site evacuation to a designated primary relocation center.
- ☐ If relocation occurs, activate FAMILY REUNIFICATION.
- ☐ If relocation is not necessary, provide information on plan to return to the building and resumption of normal operations.
- ☐ Do not allow staff and students to return to the building until the fire department or emergency Incident Commander with jurisdiction over the scene has determined that it is safe to do so and given the “All Clear”.

- ☐ Notify staff of the status of the emergency, if they can return to the building and when normal operations can resume.

B. Teachers

- ☐ Take the class roster and first-aid kit and any other supplies or resources relevant to the incident and lead students as quickly and quietly as possible out of the building to the designated assembly area(s).
- ☐ Use alternate escape routes if the regular route is blocked or there is a safety hazard.
- ☐ Assist or designate others to assist students with functional needs.
- ☐ Close the classroom door and turn out the lights upon exiting and confirm all students and personnel are out of the classroom.
- ☐ Take attendance at the assembly area. Report any missing students or staff members and/or any injuries to the Principal and/or emergency Incident Commander at the scene.
- ☐ Keep class together and wait for further instructions.
- ☐ Remain in safe area until the “All Clear” signal has been issued.
- ☐ No one may re-enter building(s) until it is declared safe by the fire department.

FLOOD

I. PURPOSE

The purpose of this annex is to ensure that there are procedures in place to protect staff/students and school property in case of a flood.

The [County] Emergency Management Agency, the National Weather Service, and other Federal cooperative agencies have an extensive river and weather monitoring system and provide flood watch and warning information to the school community via radio, television, Internet, and telephone. In the event of a flood, the Principal/ School Incident Commander will activate the School EOP.

The school siren acts as a warning system to notify staff/faculty and students in case of imminent or confirmed flooding, including that due to dam failure. If there is a loss of power, a compressed air horn or megaphone and two-way radios will serve as backup alerting/communication devices.

Operational functions or procedures that may be activated in the event of a flood include the following:

- ☐ Continuity of Operations (COOP).
- ☐ Evacuation.
- ☐ Family Reunification.
- ☐ Mental Health and Healing.
- ☐ Medical Emergency.
- ☐ Reverse Evacuation.
- ☐ Shelter-in-Place (if safe to do so and evacuation without external assistance is not possible).

II. RESPONSIBILITIES

A. Principal/School Incident Commander.

- ☐ Review circumstance and conditions and determine appropriate procedures to be activated.
- ☐ Determine if EVACUATION is required and can be safely done.
- ☐ Call or instruct staff to call 911 [insert the actual sequence to dial 9-1-1 from your phone system] to notify local law enforcement, fire and emergency services of intent to evacuate, the location of the relocation site, the route and means to be taken to that site.
- ☐ Delegate a search team to ensure that all students have been located and/or evacuated.
- ☐ Activate internal and external communications plan.
- ☐ Designate staff to monitor radio, Internet, and media for flood information and report any developments.

- ☐ Update staff, administration, and emergency responders of any significant changes in operations or conditions.
- ☐ Issue transportation instruction if students will be evacuated to a safer location by means of buses and cars.
- ☐ Notify the Superintendent/Policy Group of the status and action taken.
- ☐ Notify relocation centers and determine an alternate relocation center, if needed, if primary centers would also be flooded.
- ☐ Activate FAMILY REUNIFCIATON procedures.
- ☐ Implement additional procedures as instructed by the emergency Incident Commander with jurisdiction over the scene.
- ☐ Designate staff to take appropriate action to safeguard school property.
- ☐ Determine if school will be closed or remain open.
- ☐ Do not allow staff and students to return to the building until proper authorities have determined that it is safe to do so.
- ☐ Document all actions taken.

B. Teachers and Staff

- ☐ Execute evacuation procedures when instructed by the Principal or Incident Commander.
- ☐ Take the class roster and first-aid kit and any other supplies or resources relevant to the incident.
- ☐ Take attendance before leaving the classroom.
- ☐ Lead students as quickly and quietly as possible out of the building to the designated assembly area(s).
- ☐ Use alternate escape routes if the regular route is blocked or there is a safety hazard.
- ☐ Assist or designate others to assist students with functional needs.
- ☐ Remain with students throughout the evacuation process.
- ☐ Upon arrival at the assembly site, take attendance. Report any missing or injured students to the Incident Commander.
- ☐ Do not return to the school building until it has been inspected and determined safe by proper authorities.
- ☐ Document all actions taken.

C. Bus Drivers

- ☐ If evacuation is by bus, do not drive through flooded streets and/or roads.
- ☐ Do not attempt to cross bridges, overpasses, or tunnels that may be damaged by flooding.
- ☐ If caught in an unavoidable situation, seek higher ground immediately. If the bus stalls and water is rising abandon the bus and seek higher ground before the situation worsens.
- ☐ Use two-way radios to communicate with the Principal/ School Incident and/or emergency Incident Commander.
- ☐ Document all actions taken.

INTRUDER/HOSTAGE

I. PURPOSE

The purpose of this annex is to ensure that there are procedures in place to protect staff/students and school property in the event an unknown person (intruder) is found on school grounds or in the school building and in the event of a hostage situation. It is critical that all staff know how to handle coming into contact with an unknown person who may be an intruder with violent intent on school property, and what to do in a hostage situation.

If the incident involving an intruder or hostage situation results in law enforcement being contacted and activated, it is critical to follow the instructions of, and cooperate with, the law enforcement official who will be the Incident Commander with jurisdiction at the scene.

II. RESPONSIBILITIES

A. All Staff Should Be Trained to Take Action When an Unauthorized Person Enters School Property.

- ☐ If time permits, notify the Principal/ School Incident Commander/ School Resource Officer (SRO) and follow their instruction.
- ☐ If staff member approaches unknown person/intruder, ask another staff person to accompany and assist.
- ☐ Politely greet person/intruder and identify yourself.
- ☐ Ask person/intruder the purpose of his/her visit.
- ☐ Inform person /intruder that all visitors must register at the main office; direct and accompany him/her to the office.
- ☐ If person/intruder's purpose is not legitimate, ask him/her to leave.
- ☐ Accompany intruder to exit.

If unknown person/intruder refuses to leave:

- ☐ Do not antagonize the person/intruder and explain consequences of staying on school property.
- ☐ Walk away from person/intruder if he/she indicates a potential for violence. Be aware of intruder's actions at this time (where he/she is located in school, whether he/she is carrying a weapon or package).
- ☐ Maintain visual contact with intruder from a safe distance.
- ☐ Notify SRO, and School Incident Commander/Principal or call 911 and alert law enforcement. Give law enforcement full description of intruder. (Keep intruder unaware of call for help if possible).
- ☐ School Incident Commander/Principal notifies Superintendent and may issue LOCKDOWN or other appropriate procedures, depending on conditions, and/or as instructed by law enforcement.

B. A Hostage Situation Involves One or More Persons Being Held Against Their Will by One or More Individuals. The Goal Is To Ensure Safety of Students,

Staff and Others at the School and Prevent the Hostage(s) Being Moved Away From the School. All Staff Should be Aware of What to do in the Event of a Hostage Situation.

- ☐ If hostage taker is unaware of your presence, do not intervene.
- ☐ Notify the Principal/School Incident Commander, School Resource Officer, or call 911 if unable to reach school authorities.

If school personnel or students are taken hostage:

- ☐ Follow instructions of hostage taker.
- ☐ Try not to panic. Calm students if they are present.
- ☐ Treat the hostage taker as normally as possible.
- ☐ Be respectful to hostage taker.
- ☐ Ask permission to speak and do not argue or make suggestions.

C. Principal/School Incident Commander

- ☐ Call 9-1-1 immediately [insert the actual sequence to call 9-1-1 from your phone system]. Give dispatcher details of situation; description and number of intruders, exact location in the building and that the school is in LOCKDOWN or taking other action if appropriate (such as EVACUATION if hostage taker has a bomb). Ask for assistance from hostage negotiation team.
- ☐ Announce LOCKDOWN or other procedure if conditions warrant.
- ☐ Ensure staff outside are notified of the situation and to move students away from the building to the outside assembly areas.
- ☐ Isolate the area and try to determine if weapons are involved, if possible.
- ☐ Redirect any buses en-route to the school to an alternate location.
- ☐ Notify Superintendent and activate communications plan.
- ☐ Give control of scene to police and hostage negotiation team.
- ☐ Ensure detailed notes of events are taken.

D. Teachers and Staff

- ☐ Teachers and staff will implement LOCKDOWN or other directed procedures upon hearing the alert. If outside, move to designated assembly areas and wait for further instructions.
- ☐ Everyone should remain in their location until given the “All Clear” unless otherwise instructed to take other action by a law enforcement officer.

III. OTHER PROCEDURES (that may be activated depending on conditions)

- ☐ Active Shooter.
- ☐ Evacuation.
- ☐ Family Reunification.
- ☐ Medical Emergency.
- ☐ Mental Health and Healing.

- ☐ Shelter-in-Place.

MEDICAL EMERGENCY

I. PURPOSE

The purpose of this annex is to ensure that there are procedures in place to assist staff and students in the event of a medical emergency.

II. RESPONSIBILITIES

A. School Staff

- ☐ Quickly assess the situation. Make sure the situation is safe for you to approach (i.e., live electric wires, gas leak, building damage, etc.).
- ☐ Immediately notify the School Incident Commander/Principal.
- ☐ Assess the seriousness of the injury or illness.
- ☐ Call or have someone call 9-1-1 immediately. Be prepared to provide the school name and address, exact location (floor, room number); describe illness or type of injury; and age of the victim(s).
- ☐ Protect yourself against contact with body fluids (blood borne pathogens).
- ☐ Administer appropriate first-aid according to your level of training until help arrives.
- ☐ Comfort and reassure the injured person. Do Not Move an injured person unless the scene is unsafe.
- ☐ If the injured person is not breathing or there is no pulse, ask someone to retrieve the Automated External Defibrillator (AED) and begin Cardiopulmonary Resuscitation (CPR) or Rescue Breathing until the AED is ready to use, or call staff trained in the use of the AED to respond to the scene and apply the device.

B. School Incident Commander/ Principal

- ☐ Direct staff to call 9-1-1, if necessary, and provide appropriate information to emergency responders.
- ☐ Send school staff with first responder/first-aid/AED training to the scene if this has not already occurred.
- ☐ Assign a staff member to meet emergency medical service responders and lead them to the injured person.
- ☐ Assign a staff member to remain with the injured person if they are transported to the hospital.
- ☐ If injured person is a member of school personnel or a student, notify parent, guardian, or other appropriate family member of the situation, include type of injury or illness, medical care given and location where the injured person has been transported.
- ☐ Ensure student or staff medical information from administrative records is sent to the hospital.
- ☐ Notify the school counselor or crisis response team and provide a brief description of the incident.
- ☐ Advise faculty and staff of the situation, as appropriate.

- ☐ Develop and maintain written documentation of the incident.
- ☐ Follow-up with appropriate persons and determine if other procedures should be activated such as MENTAL HEALTH AND HEALING.

SEVERE WEATHER

I. PURPOSE

The purpose of this annex is to have procedures in place when a Severe Weather Watch or Warning has been issued in the area near the school.

II. RESPONSIBLITIES

A. School Incident Commander/ Principal

When a Severe Weather Watch has been issued.

- ☐ Monitor NOAA Weather Stations (National Weather Service, Weather Channel, or television).
- ☐ Bring all persons inside building(s).
- ☐ Be prepared to move students from mobile classrooms into the building.
- ☐ Close windows and blinds.
- ☐ Review severe weather drill procedures and location of safe areas. Severe weather safe areas are under desks, in hallways and interior rooms away from windows.
- ☐ Avoid gymnasiums and cafeterias with wide free-span roofs and large areas of glass windows.
- ☐ Review "DROP COVER and HOLD" procedures with students.
- ☐ Assign support staff to monitor all entrances and weather conditions.

When Severe Weather Warning has been issued in an area near school or severe weather has been spotted near school.

- ☐ Announce SHELTER-IN-PLACE alert signal.
- ☐ Direct students and staff inside the building to immediately move to interior safe areas, closing classroom doors after exiting.
- ☐ Ensure that students are in "DROP, COVER and HOLD" positions until the danger passes.
- ☐ Direct students and staff outside to REVERSE EVACUATE into the building.
- ☐ If outside, students and staff should move to the nearest interior safe area. If time does not permit, have students get down in the nearest ravine or open ditch or low spot away from trees or power poles.
- ☐ Relocate students and staff from any mobile classrooms in to the building.
- ☐ Remain in safe area until warning expires or until emergency personnel have issued an "All-Clear".

TERRORISM ANNEX

I. Purpose

The purpose of this annex is to ensure that there are procedures in place to protect staff/students and school property in the event of a terrorist threat. School administrators will be notified of terrorist threats through either of the following means:

- ☐ A National Terrorism Advisory System (NTAS) alert from US Department of Homeland Security.
- ☐ Directly by a law enforcement or homeland security official.

There are two terrorism threat levels in the United States: elevated and imminent. An "imminent threat" warns of a credible, specific, and impending terrorist threat against the United States. An "elevated threat" warns of a credible terrorist threat against the United States.

Terrorism threat examples include: chemical, biological, nuclear, radiological, and conventional weapon (explosives, small arms, etc.) attacks and hostage situations.

Schools should expect a heavy law enforcement involvement at the local, state and federal levels following a terrorist attack due to the incident's criminal nature. Schools should also expect that extensive media coverage, strong public fear and international implications and consequences to continue for a prolonged period.

Schools will pre-determine designated officials who will coordinate with appropriate public safety/homeland security officials in the event of a terrorist threat.

In the event of an Imminent Threat, the Federal Bureau of Investigations (FBI), Local Police Department, Local Fire Department, and the Local County Sheriff's Office will confer on the situation. Designated school officials will work with the Local Police Department and/or Sheriff's Office and agree to open or close schools.

II. RESPONSIBILITIES

A. School Officials

When an there is an imminent threat against a school or its immediate area, the following actions should be taken:

- ☐ The Superintendent will start the phone tree to contact district staff. If school is in session, immediately notify building administrators and designated school officials.
- ☐ If an alert is issued before or after school hours, normal school operations will cease, and will remain closed until advised by the designated school officials

to reopen. All school activities and events scheduled will be cancelled until further notice.

- ☐ If Alert is issued during school hours, school buildings will be secured and remain open until regular dismissal time, unless otherwise advised by the designated school officials. Students will be sent home by normal transportation means or released to parents pursuant to district policy. All after-school activities will be cancelled, unless otherwise advised by the designated school officials.
- ☐ The designated school officials will coordinate with appropriate public safety officials to determine what level of LOCKDOWN or other procedures are appropriate for the situation. FAMILY REUNIFICATION procedures will be followed in order to coordinate the release of students.

In the event of an actual terrorist attack schools should follow appropriate procedures for HOSTAGE SITUATIONS, conventional weapons incidents (e.g. EXPLOSIONS, ACTIVE SHOOTING, BOMB THREAT, etc.), and CHEMICAL/ HAZARDOUS SPILLS (biological incidents, chemical incidents, and radiological/nuclear incidents).

ATTACHMENT A

Model School Floor Plans

Provided by the Ohio Facilities Construction Commission

The Ohio Facilities Construction Commission, under guidance from the Ohio Attorney General's School Safety Taskforce, has prepared the Model School Floor Plans to help guide schools in developing and submitting floor plans that best meet the needs of emergency responders during an incident. You should print the materials in Attachment A on legal sized paper (8.5 x 14) for better viewing.

Page 1: Page one of the Model School Floor Plans represents the best example of what a finished school floor plan should look like when it is submitted to the Ohio Attorney General's Office, for inclusion in OHLEG. The floor plan meets all of the specifications set forth in the Floor Plan Checklist, provided in the Emergency Operations Plan developed by the Ohio Attorney General's School Safety Taskforce.

Page 2: Page two is an example of a blank floor plan, which should be readily obtainable by the school district. This blank floor plan can be customized to meet the requested specifications using the symbols and/or stickers provided on pages four – six of this Attachment A.

Page 3: Page three is also a blank floor plan, but is showing shaded corridors. Corridors on some floor plans may be shaded in CAD drawings provided by the school district's architecture firm.

Page 4: Page four provides the Legend Key recommended for use in developing school floor plans. These legends can be printed on clear label sheets, cut to size and be affixed to the blank floor plans referenced on pages two and three.

Page 5: Page five provides the symbols used to mark the school floor plans, as specified in the Legend Key. These symbols can be printed on clear label sheets, cut to size and be affixed to the blank floor plans to mark the key areas of the floor plans.

Page 6: Page six provides room numbers that can be used to mark the rooms shown in the floor plans. These symbols can be printed on clear label sheets, cut to size and be affixed to the blank floor plans to mark the rooms located on the floor plans.

NOTE: School officials are encouraged to review their School Floor Plans against the Floor Plan Checklist provided in the Emergency Operations Plan. The completed checklist should be submitted to the Ohio Attorney General's Office along with the documents, for review and inclusion in OHLEG. Floor plans submitted to the Ohio Attorney General's Office by hard copy must be printed on paper smaller than 11 X 17.

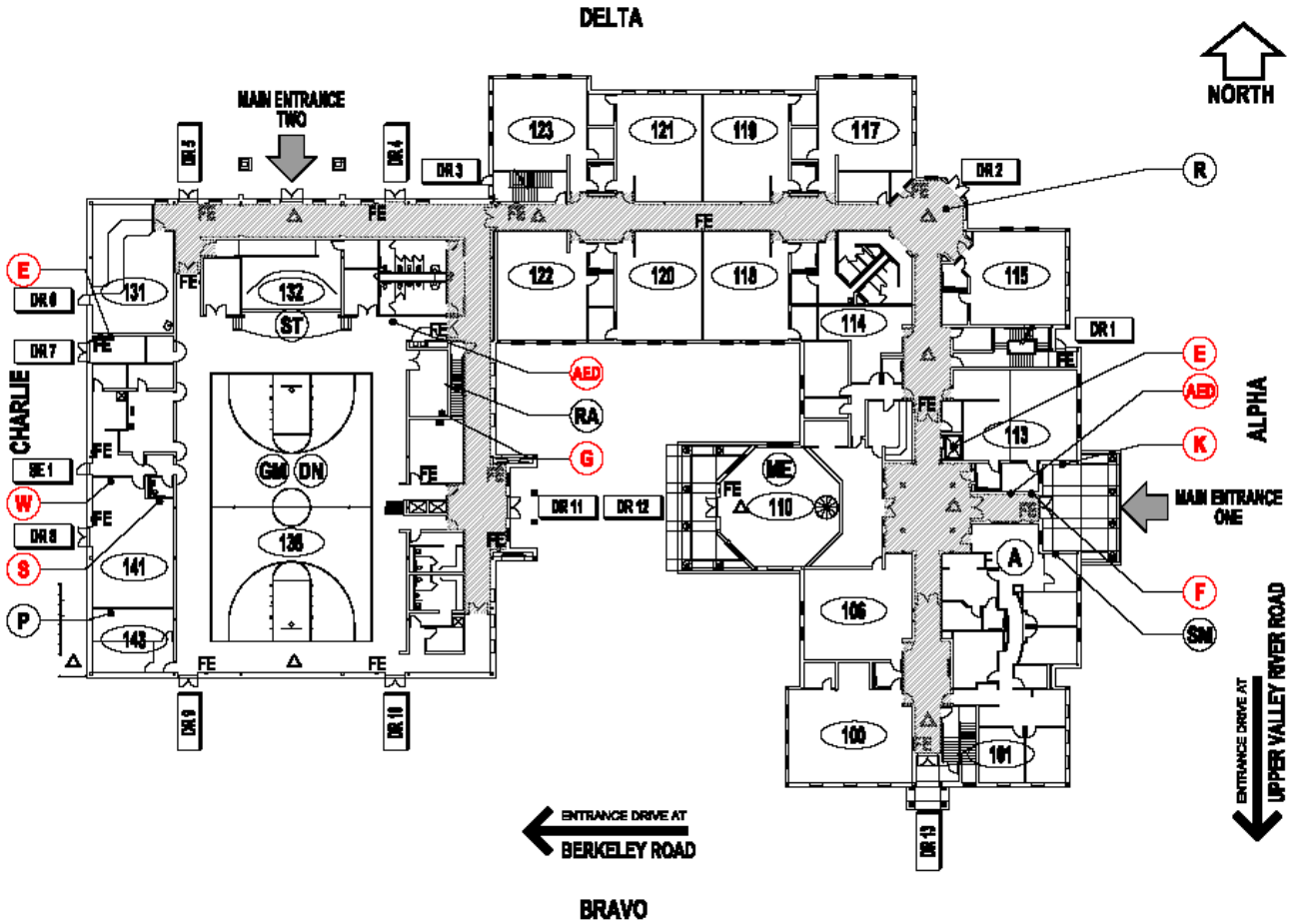

AED	LOCATION OF EXISTING AED
E	ELECTRICAL SHUTOFF
F	FIRE ALARM PANEL
G	GAS SHUTOFF
K	KNOX BOX
S	SPRINKLER SHUTOFF
W	WATER SHUTOFF
A	ADMINISTRATIVE SUITE
R	AREA OF REFUGE
△	CAMERA
	CORRIDOR
E	ELEVATOR
DR 1	EXTERIOR DOORS
FE	FIRE EXTINGUISHER
P	LOCATION OF BLUEPRINTS
RA	ROOF ACCESS POINT
123	ROOM NUMBER
SM	SECURITY MONITORING AND ACCESS CONTROL
SE 1	SERVICE ENTRANCE
DN	DINING
GM	GYMNASIUM
ME	MEDIA
ST	STAGE

CRITICAL

NON-CRITICAL

COMMON AREAS

UPPER MIDDLE VALLEY EXEMPTED SCHOOL DISTRICT
UPPER MIDDLE VALLEY MIDDLE SCHOOL
(555) 111.1111
UPPER VALLEY

FACILITY SAFETY PLAN
Ohio Facilities Construction Commission

IRN	123435
Building Telephone Number	(555) 123.4567
Emergency Telephone Number	(555) 987.6543

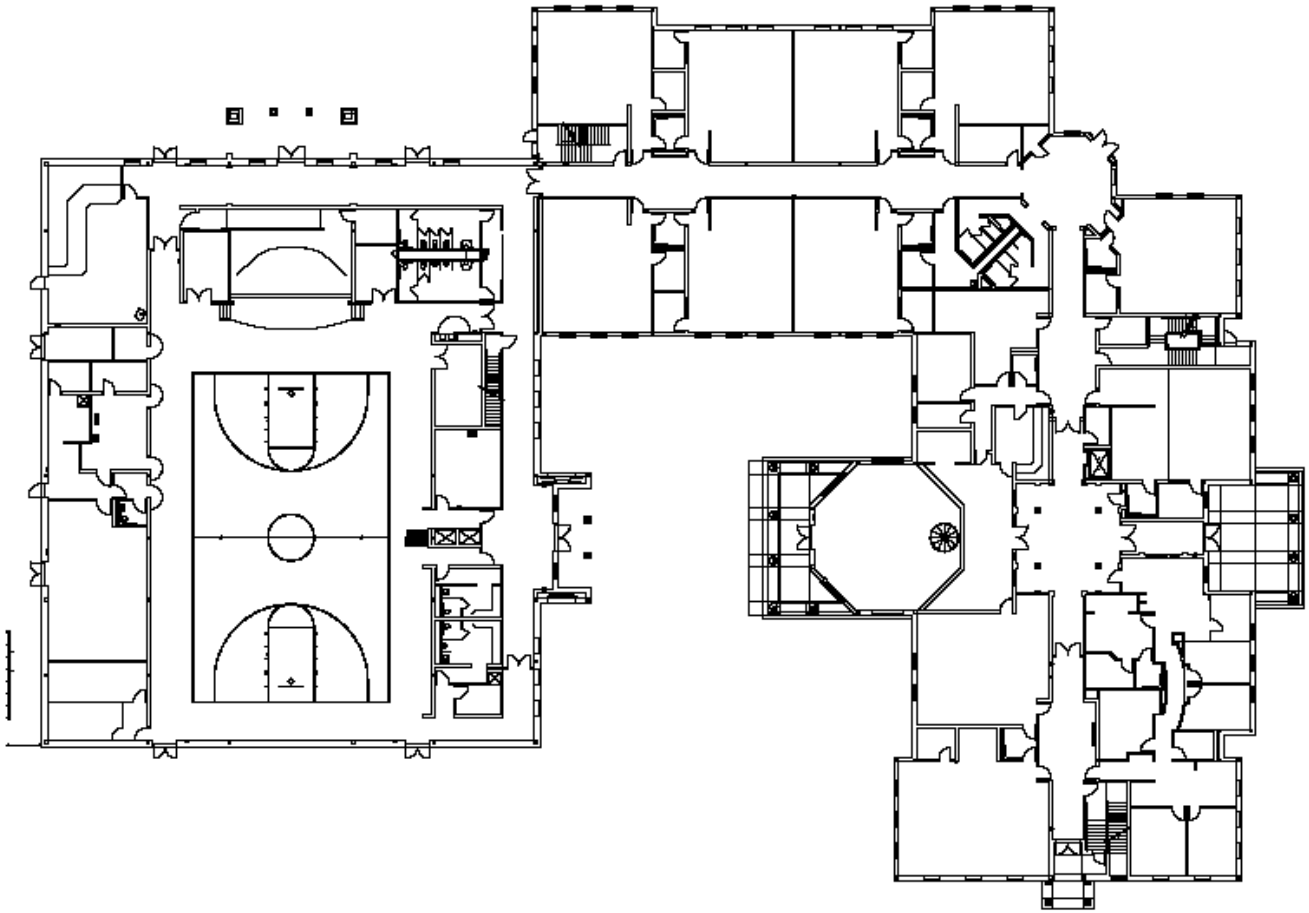

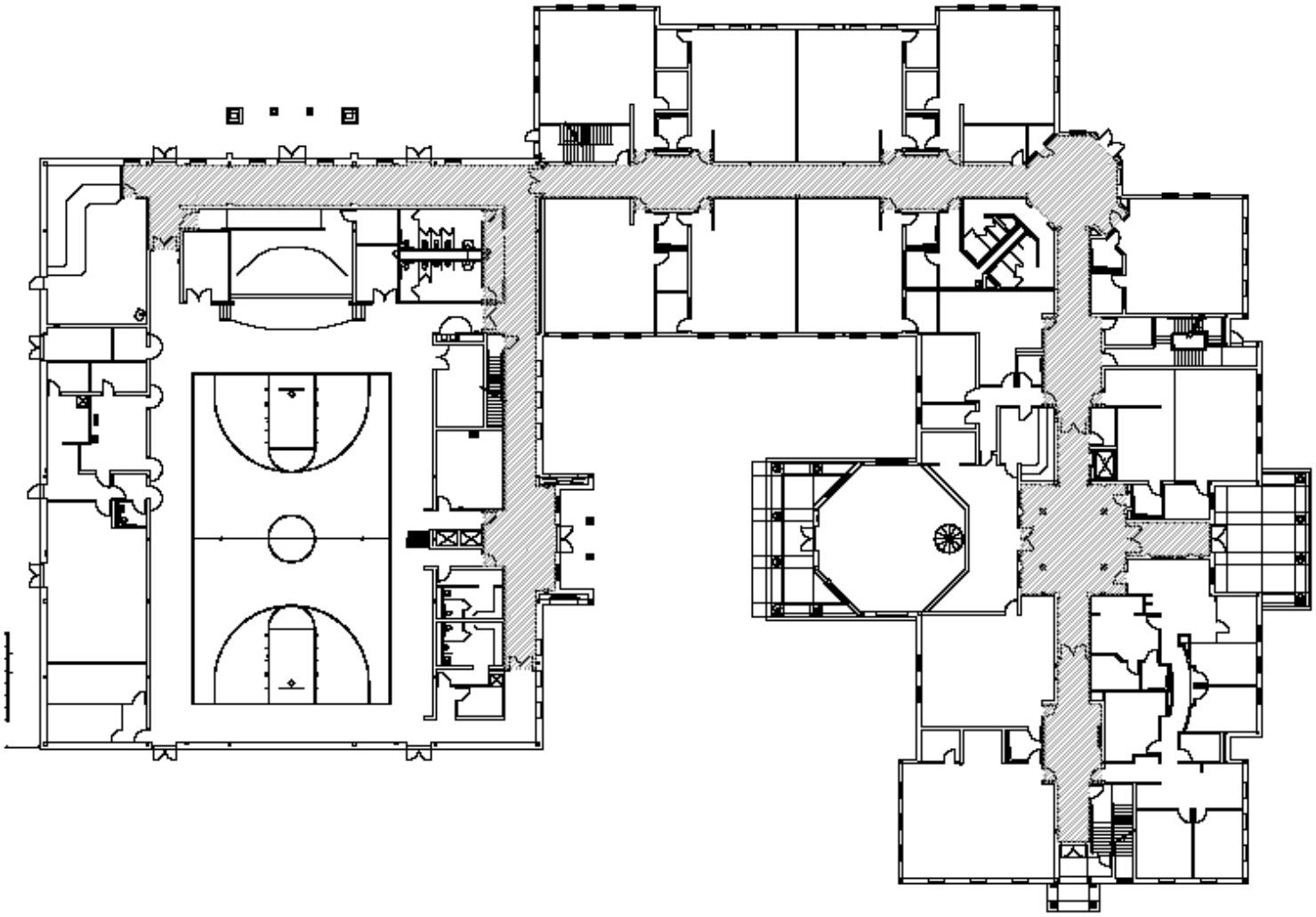

CRITICAL

- AED — LOCATION OF EXISTING AED
- E — ELECTRICAL SHUTOFF
- F — FIRE ALARM PANEL
- G — GAS SHUTOFF
- K — KNOX BOX
- S — SPRINKLER SHUTOFF
- W — WATER SHUTOFF

NON-CRITICAL

- A — ADMINISTRATIVE SUITE
- R — AREA OF REFUGE
- △ — CAMERA
- CORRIDOR
- E — ELEVATOR
- DR1 — EXTERIOR DOORS
- FE — FIRE EXTINGUISHER
- P — LOCATION OF BLUEPRINTS
- RA — ROOF ACCESS POINT
- 123 — ROOM NUMBER
- SM — SECURITY MONITORING AND ACCESS CONTROL
- SE1 — SERVICE ENTRANCE

COMMON AREAS

- DN — DINING
- GM — GYMNASIUM
- ME — MEDIA
- ST — STAGE

FACILITY SAFETY PLAN
Ohio Facilities Construction Commission

IRN	
Building Telephone Number	
Emergency Telephone Number	

CRITICAL

- AED — LOCATION OF EXISTING AED
- E — ELECTRICAL SHUTOFF
- F — FIRE ALARM PANEL
- G — GAS SHUTOFF
- K — KNOX BOX
- S — SPRINKLER SHUTOFF
- W — WATER SHUTOFF

NON-CRITICAL

- A — ADMINISTRATIVE SUITE
- R — AREA OF REFUGE
- △ — CAMERA
- CORRIDOR
- E — ELEVATOR
- DR1 — EXTERIOR DOORS
- FE — FIRE EXTINGUISHER
- P — LOCATION OF BLUEPRINTS
- RA — ROOF ACCESS POINT
- 123 — ROOM NUMBER
- SM — SECURITY MONITORING AND ACCESS CONTROL
- SE1 — SERVICE ENTRANCE

COMMON AREAS

- DN — DINING
- GM — GYMNASIUM
- ME — MEDIA
- ST — STAGE

FACILITY SAFETY PLAN
Ohio Facilities Construction Commission

IRN	
Building Telephone Number	
Emergency Telephone Number	

CRITICAL

- AED — LOCATION OF EXISTING AED
- E — ELECTRICAL SHUTOFF
- F — FIRE ALARM PANEL
- G — GAS SHUTOFF
- K — KNOX BOX
- S — SPRINKLER SHUTOFF
- W — WATER SHUTOFF

NON-CRITICAL

- A — ADMINISTRATIVE SUITE
- R — AREA OF REFUGE
- △ — CAMERA
- CORRIDOR
- E — ELEVATOR
- DR1 — EXTERIOR DOORS
- FE — FIRE EXTINGUISHER
- P — LOCATION OF BLUEPRINTS
- RA — ROOF ACCESS POINT
- 123 — ROOM NUMBER
- SM — SECURITY MONITORING AND ACCESS CONTROL
- SE1 — SERVICE ENTRANCE

COMMON AREAS

- DN — DINING
- GM — GYMNASIUM
- ME — MEDIA
- ST — STAGE

FACILITY SAFETY PLAN
Ohio Facilities Construction Commission

IRN	
Building Telephone Number	
Emergency Telephone Number	

CRITICAL

- AED — LOCATION OF EXISTING AED
- E — ELECTRICAL SHUTOFF
- F — FIRE ALARM PANEL
- G — GAS SHUTOFF
- K — KNOX BOX
- S — SPRINKLER SHUTOFF
- W — WATER SHUTOFF

NON-CRITICAL

- A — ADMINISTRATIVE SUITE
- R — AREA OF REFUGE
- △ — CAMERA
- CORRIDOR
- E — ELEVATOR
- DR1 — EXTERIOR DOORS
- FE — FIRE EXTINGUISHER
- P — LOCATION OF BLUEPRINTS
- RA — ROOF ACCESS POINT
- 123 — ROOM NUMBER
- SM — SECURITY MONITORING AND ACCESS CONTROL
- SE1 — SERVICE ENTRANCE

COMMON AREAS

- DN — DINING
- GM — GYMNASIUM
- ME — MEDIA
- ST — STAGE

FACILITY SAFETY PLAN
Ohio Facilities Construction Commission

IRN	
Building Telephone Number	
Emergency Telephone Number	

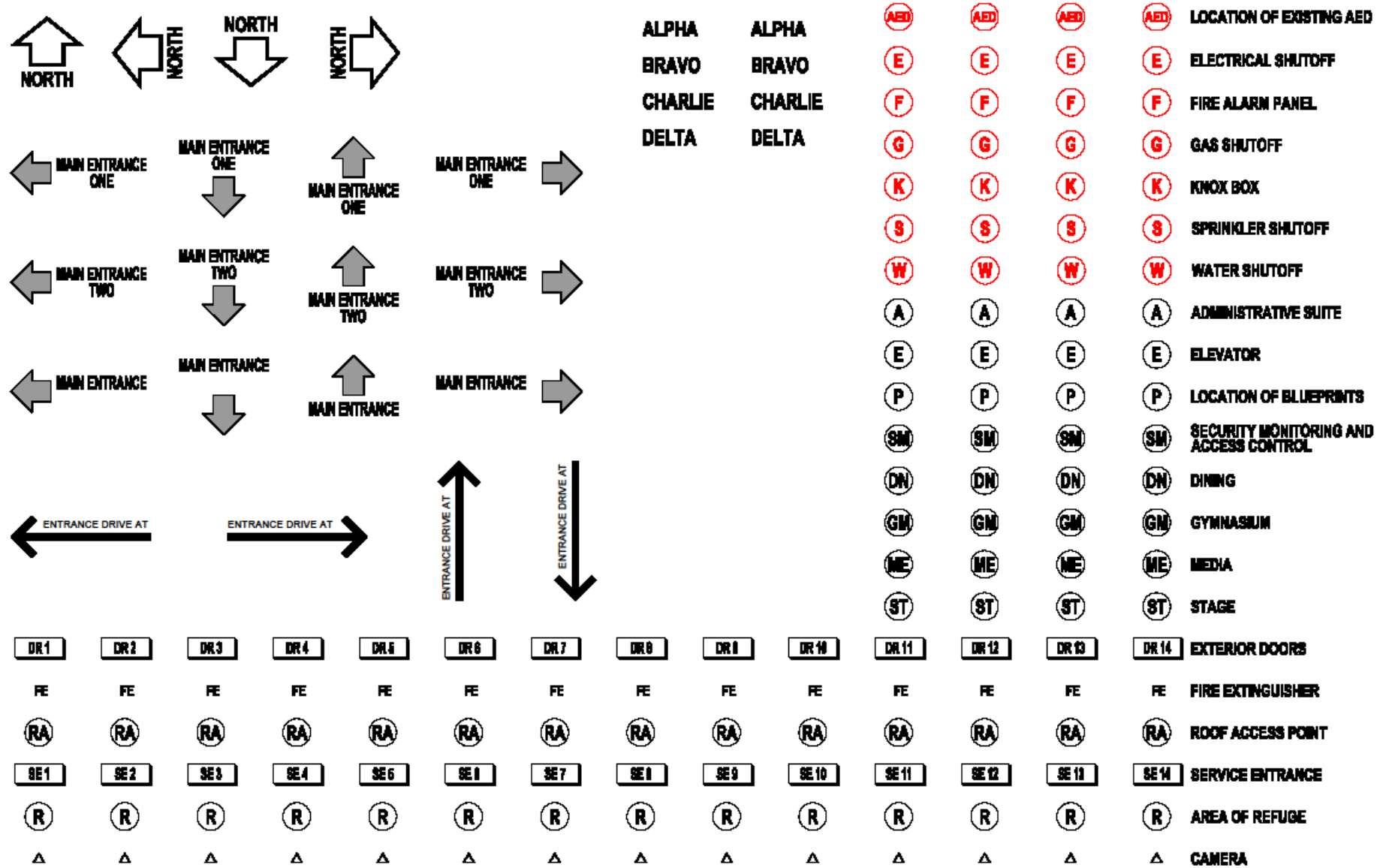
NORTH
NORTH
NORTH
NORTH
MAIN ENTRANCE ONE
MAIN ENTRANCE TWO
MAIN ENTRANCE
ENTRANCE DRIVE AT
ALPHA
BRAVO
CHARLIE
DELTA
LOCATION OF EXISTING AED
ELECTRICAL SHUTOFF
FIRE ALARM PANEL
GAS SHUTOFF
KNOX BOX
SPRINKLER SHUTOFF
WATER SHUTOFF
ADMINISTRATIVE SUITE
ELEVATOR
LOCATION OF BLUEPRINTS
SECURITY MONITORING AND ACCESS CONTROL
DINING
GYMNASIUM
MEDIA
STAGE
EXTERIOR DOORS
FIRE EXTINGUISHER
ROOF ACCESS POINT
SERVICE ENTRANCE
AREA OF REFUGE
CAMERA

101	121	141	161	181
102	122	142	162	182
103	123	143	163	183
104	124	144	164	184
105	125	145	165	185
106	126	146	166	186
107	127	147	167	187
108	128	148	168	188
109	129	149	169	189
110	130	150	170	190
111	131	151	171	191
112	132	152	172	192
113	133	153	173	193
114	134	154	174	194
115	135	155	175	195
116	136	156	176	196
117	137	157	177	197
118	138	158	178	198
119	139	159	179	199
120	140	160	180	

201	221	241	261	281
202	222	242	262	282
203	223	243	263	283
204	224	244	264	284
205	225	245	265	285
206	226	246	266	286
207	227	247	267	287
208	228	248	268	288
209	229	249	269	289
210	230	250	270	290
211	231	251	271	291
212	232	252	272	292
213	233	253	273	293
214	234	254	274	294
215	235	255	275	295
216	236	256	276	296
217	237	257	277	297
218	238	258	278	298
219	239	259	279	299
220	240	260	280	

ATTACHMENT B

School Emergency Operations Plan (EOP) Development & Review Checklist

School: _____

Date of Review: _____ Reviewer: _____

Base Plan
Provides an overview of the School's emergency program and the ability to prepare for, respond to, and recover from disasters/emergencies.

A. Introductory Material

Standard Minimum Planning Elements	Plan Location: Section & Page	Comments
Emergency First Responder Information		
School floor plans		
Signatory page		
Table of Contents - outlines the plan's format, major sections/key elements, chapters, and charts/attachments/ diagrams.		
Plan Development and Review Checklist – reflects current plan content and location information.		

B. Purpose, Situation Overview, and Assumptions – Explains the plan's intent, who it involves, and why it was developed.

Standard Minimum Planning Elements	Plan Location: Section & Page	Comments
Purpose - describes the purpose for developing and maintaining the EOP.		
Scope - explains that the plan provides guidelines and procedures for dealing with incidents through a basic plan and functional and hazard-specific annexes.		

Coordination with Emergency First Responders – Describes coordination and cooperation with first responders and outside agencies to develop the plan and any mutual aid agreements.		
Situation Overview - describes where school population information is kept and provides relevant building information		
Hazard Analysis Summary - Identifies and describes the hazards (natural, technological, public health, and man-made) that pose a unique risk to the school and that would create a need to activate this plan.		
Planning Assumptions - identifies what the planning team assumes to be facts for planning purposes in order to make it possible to execute the EOP.		

C. **Concept of Operations** - Explains the decision maker's or leader's intent with regard to an operation, and how the school accomplishes a mission or set of objectives in order to reach a desired end-state.

Standard Minimum Planning Elements	Plan Location: Section & Page	Comments
Describes who has the authority to activate the plan.		
Describes the responsibilities of school officials until an emergency responders arrive		

D. **Organization and Assignment of Responsibilities** - Overview of the key functions that school staff and local agencies will accomplish to support the school during an emergency.

Standard Minimum Planning Elements	Plan Location: Section & Page	Comments
Outlines the responsibilities assigned to each individual or organization that has an emergency response and/or recovery assignment of responsibility in the plan. Include school Principal or building administrator, teachers, instructional assistants, counselors, school nurse, custodian/maintenance staff, administrative/office staff, food service		

staff, bus drivers, students, parents and guardians, and other staff as applicable.		

E. **Direction, Control, and Coordination** - describes the framework for all direction, control, and coordination activities.

Standard Minimum Planning Elements	Plan Location: Section & Page	Comments
Describes the school's coordination systems and processes used during an emergency.		
Assigns staff to serve within the School Incident Command System based on their expertise and training and the needs of the incident.		
Identifies and describes mutual aid agreements that are in place. Identifies and briefly summarizes who is covered by the agreement, for what goods or services, and what limitations apply if any. (**Notes:** The actual agreements should not be included in the plan. Mutual aid may be addressed separately in each section of the EOP if it helps to better explain how a mutual aid agreement directly supports a specific function.)		

F. **Communications** - the system for providing reliable and effective communications among responders and the school during an emergency.

Standard Minimum Planning Elements	Plan Location: Section & Page	Comments
Describes the framework for communicating internally and externally. Providing communications support and how the jurisdiction's communications network integrates with the regional or national disaster communications network.		
Internal communications should include:		
a. Communicating with staff and faculty members		

b. Communicating with the school district office		
External communications should include:		
a. Communicating with parents		
b. Communicating with first responders		
c. Communicating with media		
Describes the school's framework for addressing rumors.		
Describes the school's framework for addressing communicating the recovery process.		
Describes the school's communications tools.		

G. **Recovery After an Incident -** describes the procedures for restoration of the school's educational programs after an incident

Standard Minimum Planning Elements	Plan Location: Section & Page	Comments
Describes the process for evaluating recovery needs and preparing to provide for post-incident educational and recovery needs.		

H. **Administration, Finance, and Logistics -** describes administrative, finance, and logistic actions during an emergency.

Standard Minimum Planning Elements	Plan Location: Section & Page	Comments
Administration - describes the administrative actions used during an emergency operation, including requests for assistance from outside agencies		
Describes the following record keeping activities		
– Administrative controls		
– Activity logs		
– Incident costs		
– Preservation of records		

I. **Plan Development and Maintenance** - describes the process used to regularly review and update the EOP.

Standard Minimum Planning Elements	Plan Location: Section & Page	Comments
Describes the process used to develop the plan including the role of support agencies in the process.		
Describes the process used to disseminate the plan including record of changes and record of distribution.		
Describes the process for plan review and revision.		
Describes the process for training and exercising the plan.		

Functional and Hazard Specific Annexes

Annexes that contain detailed descriptions of the methods the school follows for critical operational functions or specific hazards during emergency operations. These functional and hazard-specific annexes are optional but should be included if a specific function or functions require special planning consideration. Any hazards identified during the hazard analysis should be addressed in a hazard-specific annex. Functional and hazard-specific annexes should be organized in the same manner as the base EOP.

A. **_____ (insert function or hazard name) (repeat as necessary to include all annexes)**

Purpose & Responsibilities – Explains the annex intent and the responsibilities of school staff.

Standard Minimum Planning Elements	Plan Location: Section & Page	Comments
i. Purpose - describes the purpose for developing and maintaining the Annex.		
ii. Responsibilities/Procedures - describes responsibilities of the school incident commander/principal, key planning teams/leaders, teachers, and other staff.		